Bottom

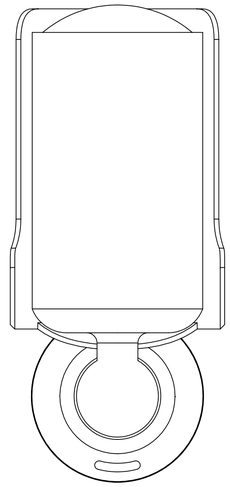

Side

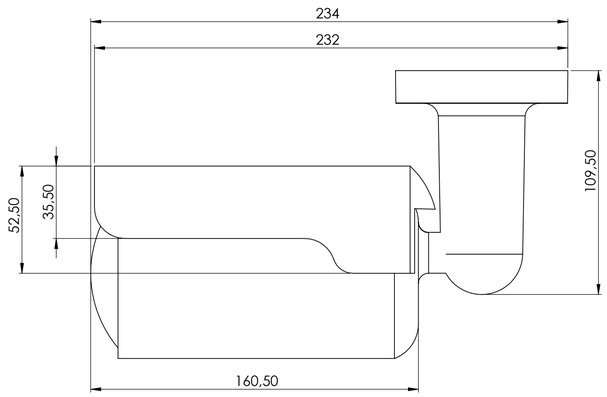

Front

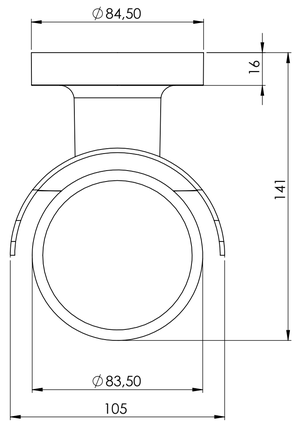

wall mount

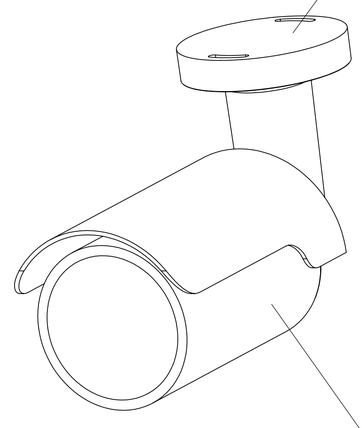

camera housing

Top

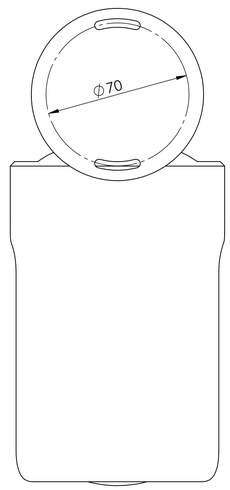

MOBOTIX does not take responsibility for the correctness and completeness of this data and recommends to verify the design and measures with the actual product delivered. Measures on goods delivered may vary due to manufacturing tolerances and environmental temperature material impacts. Technical specifications of the enclosed data is subject to change without notice. As all Design information are subject to MOBOTIX IPR, the reproduction and distribution of this data as well as the communication of its contents is prohibited and offenders will be held liable.

We reserve all right for this technical document. It may only be used for purposes determined by us and not be reproduced nor duplicated for third party use

All dimensions are in millimeter

	Date	Name
Process	24.06.2020	MiDie
Control		
Norm	CAD-A1	SolidWorks

Material

Weight

Scale 2:3

MOBOTIX
BeyondHumanVision

20.072.659-01 Mx-VB1A-4-IR-D

Replacement

Sheet 1 of 1

Des.	Changes	Date	Name