Installation Guide

MOBOTIX S ONE DUAL

© 2026 MOBOTIX AG

HEVCAdvance™ NDAA Compliant

BeyondHumanVision

MOBOTIX

Document ID: Mx_IG_Mx-ONE-S1A-D_V1.46_EN
V1.46, 10/21/2026, Order Code: Mx-ONE-S1A-D

Table of Contents

Table of Contents ... **2**
Before You Start ... **5**
Support ... 6
MOBOTIX Support ... 6
MOBOTIX eCampus ... 6
MOBOTIX Community ... 6
Safety Notes ... 6
Legal Notes ... 7
Notes on System Security ... 8
Protective Measures ... 9
Notes on Cabling ... 9
Fire Protection ... 9
Lightning and Surge Protection ... 10
Drilling Template ... **11**
Drilling Template PDF ... 12
Scope of Delivery ... **13**
S ONE DUAL: Scope of Delivery ... 14
Mounting Supplies: Scope of Delivery ... 15
PTMount: Scope of Delivery ... 16
Overview ... **17**
Parts of the Camera ... 18
Technical Specifications ... **19**
Order Information MOBOTIX S ONE DUAL ... 20
Hardware ... 20
Image and Video Properties ... 22
General Software Features ... 22
Video Analysis ... 23
Video Management Software ... 23
Accessories ... 23
Sensor Modules ... 24
Standard Sensor Modules (4K Day & Night) ... 24
Technical Specifications Sensor Modules ... 24
Dimensions Sensor Modules ... 25
Thermal Sensor Modules ... 25
Technical Specifications ... 25
Dimensions Thermal Sensor Modules ... 27
Mx-ONE-SMA-640R050 ... 27
Mx-ONE-SMA-640R100 ... 28
Module Cables ... 29
Mounts ... 29
Dimensions ... 30
Mounting ... **31**
Before Mounting the Camera ... 32
Protective Measures ... 32
Notes on Cabling ... 33
Fire Protection ... 33
Lightning and Surge Protection ... 33
Installing Sensor Modules ... 33
Preparing the Sensor Modules ... 34

Installing Sensor Module without Mounts 34
Installing Sensor Module with PTMount 35
Installing the BlockFlexMount 42
Connecting the Camera 42
Connecting Module Cables to the Camera 43
Connecting a USB-C Device 44
Connecting I/O Devices 45
I/O Terminal Pin-Out 46
Connecting the Camera to the Network 47
Mounting the Camera 48
Adjusting the Camera 49
Adjust the Lens Focus 49
Operating the Camera 51
Getting Started 52
LED States 52
Boot Options of the Camera 52
Network Settings 54
Initial Camera Setup 54
Check the Preconditions 54
Access the Camera 55
Find the "Real" IP Address of the Camera 58
Automatic Setup using MxManagementCenter 58
Network Settings on the Camera in MxMC 58
Network Settings on the Camera in the Web Browser 60
Camera Software in the Browser 61
Access the Camera in the Web Browser 62
Basic Settings 62
Maintenance 65
Replacing the microSD card 66
Cleaning the Camera and Lenses 67

1

Before You Start

Support **6**

MOBOTIX Support 6

MOBOTIX eCampus 6

MOBOTIX Community 6

Safety Notes **6**

Legal Notes **7**

Notes on System Security **8**

Protective Measures **9**

Notes on Cabling 9

Fire Protection 9

Lightning and Surge Protection 10

Support

MOBOTIX Support

If you need technical support, please contact your MOBOTIX dealer. If your dealer cannot resolve the issue, they will contact MOBOTIX Support on your behalf.

If you have internet access, visit the MOBOTIX Help Desk for additional information and software updates.

www.mobotix.com > Services > Help Desk.

MOBOTIX eCampus

The MOBOTIX eCampus is a comprehensive e-learning platform that lets you access training content whenever and wherever you want. Simply open the site in your browser and select the desired training course.

www.mobotix.com/ecampus-mobotix.

MOBOTIX Community

The MOBOTIX Community is another valuable source of information. MOBOTIX staff and other users share their knowledge and experience – and you can contribute too.

community.mobotix.com.

Safety Notes

- This product must be installed by qualified personnel, and the installation must comply with all applicable local regulations.
- Do not use this product in potentially explosive atmospheres.
- Install this product in a well-ventilated location and do not block any ventilation openings.

- Do not use this product in dusty environments.
- Prevent moisture or water from entering the housing.
- Install this product as described in this document. An incorrect installation can damage the product!
- Do not replace the device batteries. Replacing a battery with an incorrect type may cause an explosion.
- External power supplies must comply with the Limited Power Source (LPS) requirements and have the same power specifications as the camera.
- To comply with the requirements of EN 50130-4 for the power supply of alarm systems in 24/7 operation, the use of an uninterruptible power supply (UPS) is highly recommended to ensure reliable operation during power interruptions.

Legal Notes

Copyright Notice!

© 2019 MOBOTIX AG. All rights reserved.

This document and its contents are the property of MOBOTIX AG and are protected by applicable copyright laws. Any reproduction, distribution, modification, or use of this document, in whole or in part, without prior written permission of MOBOTIX AG is strictly prohibited.

All product names, trademarks, logos, and brands referenced in this document are the property of their respective owners. These may include, but are not limited to, trademarks and certification marks of third-party organizations. The use of such marks is for identification and informational purposes only and does not imply any affiliation with or endorsement by the respective trademark owners. MOBOTIX AG acknowledges the rights of all trademark holders and makes no claim to trademarks owned by third parties.

Legal Aspects of Video and Sound Recording

You must comply with all data protection regulations for video and sound monitoring when using MOBOTIX AG products. Depending on national laws and the installation location of the cameras, the recording of video and sound data may be subject to special documentation or it may be prohibited. All users of MOBOTIX products are therefore required to familiarize themselves with all applicable regulations and to comply with these laws. MOBOTIX AG is not liable for any illegal use of its products.

Declaration of Conformity

The products of MOBOTIX AG are certified according to the applicable regulations of the EC and other countries. You can find the declarations of conformity for the products of MOBOTIX AG on www.mobotix.com under **Services > Download Center > Marketing & Documentation > Certificates & Declarations of Conformity**.

RoHS Declaration

The products of MOBOTIX AG are in full compliance with European Unions Restrictions of the Use of Certain Hazardous Substances in Electrical and Electronic Equipment (RoHS Directive 2011/65/EU) as far as they are subject to these regulations (for the RoHS Declaration of MOBOTIX, please see www.mobotix.com, **Services > Download Center > Marketing & Documentation > Brochures & Guides > Certificates**).

Disposal

Electrical and electronic products contain many valuable materials. For this reason, we recommend that you dispose of MOBOTIX products at the end of their service life in accordance with all legal requirements and regulations (or deposit these products at a municipal collection center). MOBOTIX products must not be disposed of in household waste! If the product contains a battery, please dispose of the battery separately (the corresponding product manuals contain specific directions if the product contains a battery).

Disclaimer

MOBOTIX AG does not assume any responsibility for damages, which are the result of improper use or failure to comply to the manuals or the applicable rules and regulations. Our General Terms and Conditions apply. You can download the current version of the **General Terms and Conditions** from our website at www.mobotix.com by clicking on the corresponding link at the bottom of every page.

FCC Disclaimer

This equipment has been tested and found to comply with the limits for a Class A digital device, pursuant to part 15 of the FCC Rules. These limits are designed to provide reasonable protection against harmful interference when the equipment is operated in a commercial environment. This equipment generates, uses, and can radiate radio frequency energy and, if not installed and used in accordance with the instruction manual, may cause harmful interference to radio communications. Operation of this equipment in a residential area is likely to cause harmful interference in which case the user will be required to correct the interference at his own expense.

Notes on System Security

To protect the camera against cybersecurity threats, the following security measures are enabled by default:

- Password must be changed when camera software is accessed for the first time.
- Public access is disabled.
- Intrusion detection is enabled.
- Timeout for grouping accesses from the same client into a single log entry is set to 60 minutes.
- IP addresses of offending HTTP clients are blocked.

The following measures are recommended after the installation has been completed:

Camera Web Interface

- **Admin Menu > Network Setup > Web Server**:
  - **Enable intrusion detection**: Enable notifications for repeated unsuccessful login attempts.
  - **Notification threshold**: Set the value as low as possible (for example, 5 minutes).

MxManagementCenter

- Menu View > Components View > Secure System:
  - **Enable encrypted HTTPS**: Disable all services that require unencrypted HTTP (for example, IP notify messages). Router settings may need to be adjusted when using remote access.
  - **User Management** (for all users):
    - **Force Complex Password**: Enabled
    - **Log out on Inactivity:** 5 minutes

For more information on this new feature, please read the «Cyber Protection Guide» on www.mobotix.com (under **Services > Download Center > Documentation > Brochures & Guides > Cyber Security**).

Protective Measures

WARNING!
When laying cables indoors and outdoors, the current regulations for cable laying, lightning and fire protection must always be observed.

MOBOTIX cameras and devices are protected against the effects of minor over voltages by a number of measures. However, these measures cannot prevent larger surge voltages from causing damage to the camera. When installing the cameras outdoors, special attention should therefore be paid to lightning protection and the associated dangers for the building and network infrastructure.

In general, you should only have MOBOTIX cameras and devices installed by certified specialist companies that are familiar with the installation and safe operation of network devices and the underlying regulations for lightning and fire protection as well as the current technology for preventing damage from surge voltages.

Notes on Cabling

- **Data cable:** Only double-shielded CAT5 cable or better (S/STP) may be used as data cable for the Ethernet interface.
- **Cable length:** The individual cable sections must not exceed the maximum permissible lengths in order to ensure perfect data transmission.
- **Avoidance of induction:** Data cables may only be laid parallel to power or high-voltage lines if the prescribed minimum distances are observed.

Fire Protection

When laying cables for the power supply, the relevant country-specific regulations (e.g. VDE in Germany) and the fire protection regulations valid at the installation site must be observed.

Lightning and Surge Protection

Measures should always be taken to protect this device from electrical surge damage.

NOTE!
Electrical surge protection available using the MX-Overvoltage-Protection-Box, which is available as an accessory.

Further information on how to avoid damage caused by lightning and over voltage is available from manufacturers of lightning and over voltage protection devices.

1

Drilling Template

Open this file in a PDF viewer (Adobe Reader or similar) and print the file **without scaling (original size)**.

NOTE!

Drilling template: **www.mobotix.com > Services > Download Center > Marketing & Documentation > Drilling Templates**.

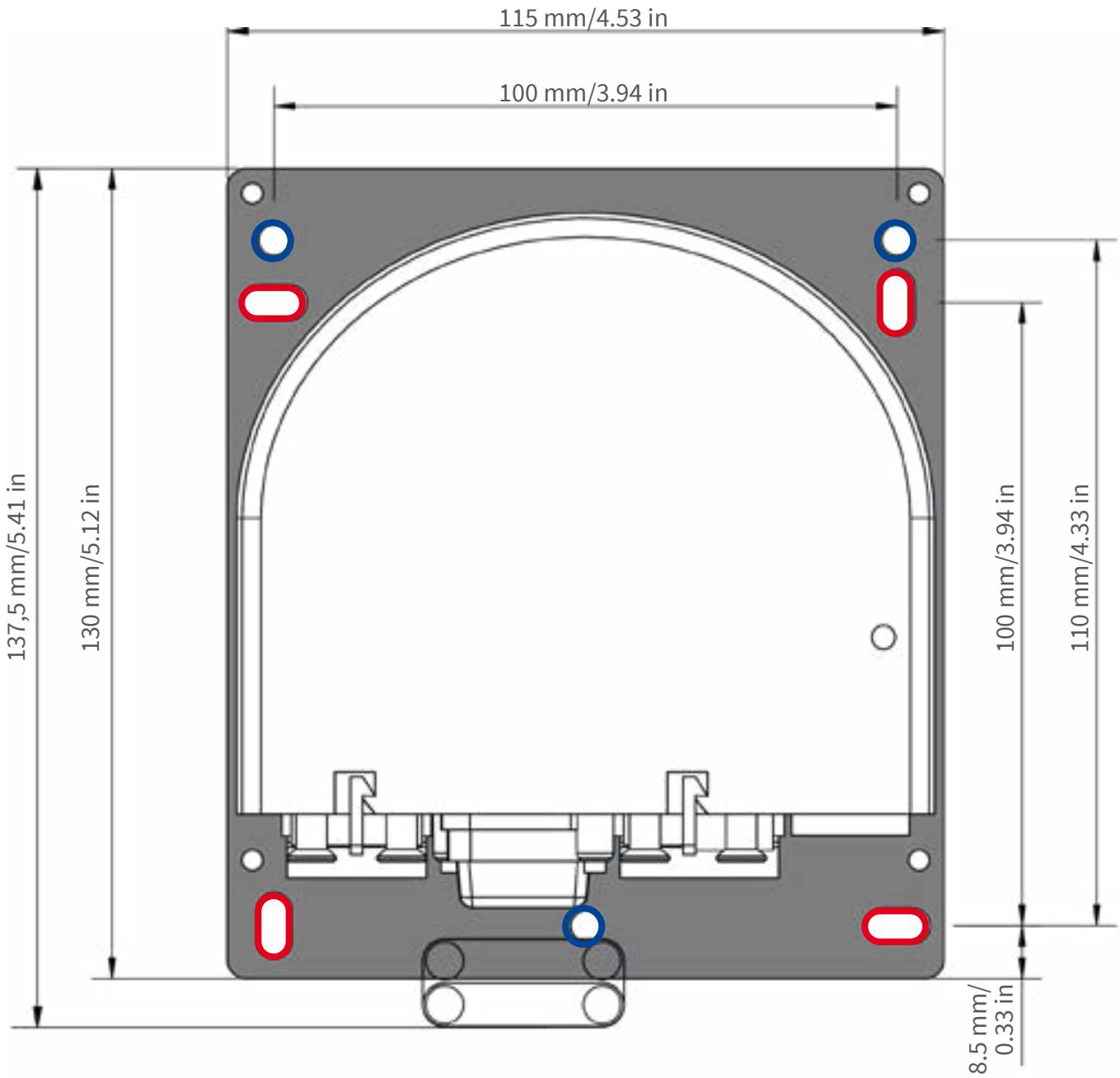

- Langlöcher / Slot holes / Trous oblongs
  10,5 mm/0.41 in, Ø 5,5 mm/0.22 in
- Gewindebohrungen / Tap holes / Trous taraudés M6

Nur in Originalgröße kopieren oder ausdrucken!

Always copy or print at 100% of original size!

Copier ou imprimer uniquement aux dimensions d'origine !

2

Scope of Delivery

S ONE DUAL: Scope of Delivery 14
Mounting Supplies: Scope of Delivery 15
PTMount: Scope of Delivery 16

S ONE DUAL: Scope of Delivery

Item	Count	Description
1.1	1	S ONE DUAL body
1.2	1	MOBOTIX Ethernet patch cable, 50 cm/19.7 in (installed)
1.3	1	microSD card 64 GB (installed)
1.4	1	Mounting supplies (see Mounting Supplies: Scope of Delivery, p. 15)
1.5	1	Important Safety Information
1.6	1	Sticker with IP address of camera

Mounting Supplies: Scope of Delivery

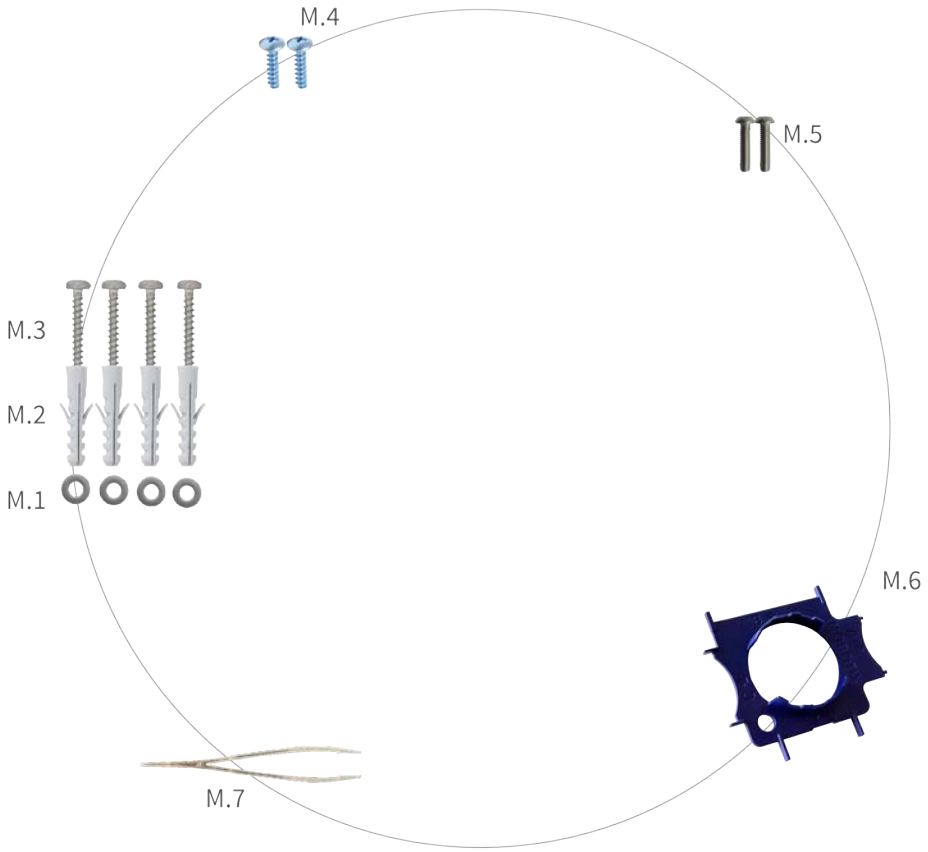

Item	Count	Description
M.1	4	Stainless steel washers Ø4.3 mm
M.2	4	Dowel S8
M.3	4	Wood screw 4.0x40 mm
M.4	2	Flat head screw 3x10 mm, self-tapping
M.5	2	Flat head screw M3x12 mm, metric
M.6	1	MultiTool module wrench
M.7	1	Plastic Tweezers

PTMount: Scope of Delivery

Scope of Delivery PTMount

Item	Count	Description
PM.1	1	Sphere with rotating insert (installed)
PM.2	1	Foot (installed)
PM.3	1	Base plate (installed)
PM.4	1	Swivel ring (installed)
PM.5	1	Sealing
PM.6	4	Washer Ø 4.3 mm, stainless steel
PM.7	4	Wood screw 4x40 mm, stainless steel
PM.8	4	Dowel S6
PM.9	1	Allen wrench 2.5 mm

3

Overview

Parts of the Camera **18**

Parts of the Camera

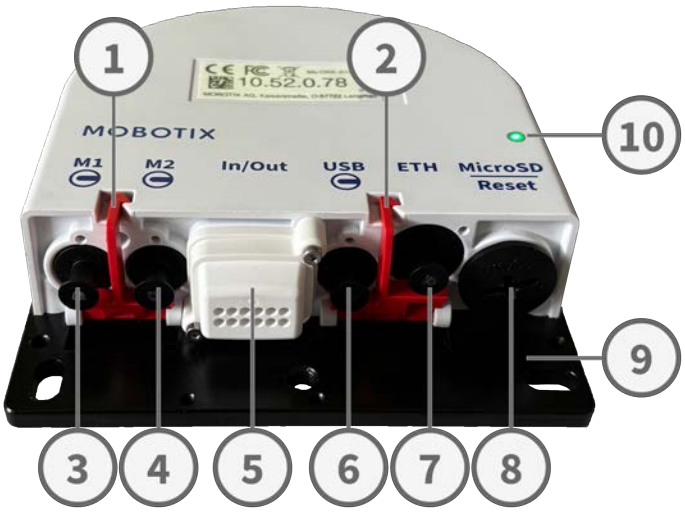

① Module lock	② ETH/USB lock
③ Module connector M1	④ Module connector M2
⑤ I/O connectors	⑥ USB-C connector
⑦ Ethernet / RJ45 connector	⑧ microSD card / Reset button
⑨ Mounting plate	⑩ Status LED

4

Technical Specifications

Order Information MOBOTIX S ONE DUAL **20**

Hardware **20**

Image and Video Properties **22**

General Software Features **22**

Video Analysis **23**

Video Management Software **23**

Accessories **23**

Sensor Modules 24

Mounts 29

Dimensions **30**

Order Information MOBOTIX S ONE DUAL

Order Code:	Mx-ONE-S1A-D (Body only)

Hardware

Feature	Properties
Image sensor (color or B&W sensor)	Up to 4K UHD 3840x2160, 16:9, 1/1.8”
Available Lenses	See Sensor Modules, p. 24
Light sensitivity	Color sensor: 0.1 lx @ 1/60 s; 0.005 lx @ 1 s
Exposure control	Manual and automatic mode 1 s to 1/16.000 s
IK protection class	Sensor modules: IK10
IP / NEMA protection class	IP66 / NEMA 4X
Intended use	Do not use in hazardous areas (Ex area)
Operating temperature range	-40 to 65 °C/-40 to 149 °F
Min. cold start temperature	-30 °C/-22 °F
Relative Humidity	5 % to 95 %, non-condensing
Internal DVR Storage	Internal microSD card (SDHC/SDXC), 64 GB out-of-the-box, max. 2 TB.

I/Os	INPUT
	▪ Contact Closure (no galvanic isolation necessary) or up to 30 Vrms AC / 50 V DC
	▪ Switching thresholds
	  ▪ Input >1.6 V leads to a detected HIGH
	  ▪ Input <0.9 V leads to a detected LOW (after a high)
	▪ Max. length for cables: 50 m
	
	OUTPUT
	▪ 3x Dry contact, form A (max 30 Vrms / max, 50 V DC / 60 W / 2 A DC)

Microphone	Microphone (integrated in ONE sensor modules): See Sensor Modules, p. 24
Speaker	External speaker required: ▪ 1.8 W @ 8 Ω

Feature	Properties
Allowed cable dimensions for cables connected to the PCB terminals	*Conductor cross section* ■ *AWG*: 26 – 20 ■ *Rigid*: 0.14 – 0.5 mm2 ■ *Flexible*: 0.14 – 0.5 mm2 ■ *Flexible with ferrule without plastic sleeve*: 0.25 – 0.34 mm2 ■ *Flexible with ferrule with plastic sleeve*: 0.14 – 0.25 mm2
Tampering Detection	Integrated Shock Sensor
PoE standard	PoE (802.3af-2003), Class 3
Power consumption	■ Max. 12.95 W / 270 mA (average can be significantly lower) ■ Average in dual operation: 9.0 W ■ Dual operation, WDR off: approx. 5.63 W ■ Dual operation, WDR on: approx. 6.27 W MxActivitySensorONE per Sensor: approx. 1.4 W
Electrical surge protection	Overvoltage Protection Box (not part of the scope of delivery)
Interfaces	■ Ethernet 1000Base-T (RJ45 according to EIA/TIA-568B) ■ Sensor Modules M1, M2 ■ USB 2.0/3.0 via USB-C connector ■ 12-24 V DC power supply ■ Input / Output ■ Ext. Speaker ■ microSD card, max. 2 TB
Status LED	Multicolor (8 colors)
Mounting Options	Wall, ceiling, hidden installation; extensive selection of mounting accessories available (see Mounts, p. 29)
Dimensions (height x width x depth)	Camera: 137.5 x 115 x 33 mm Sensor Modules: See Sensor Modules, p. 24
Weight	Camera: 0.54 kg Sensor Modules: See Sensor Modules, p. 24
Housing	Aluminum, PBT-30GF
Detailed technical documentation	**www.mobotix.com > Services > Download Center > Marketing & Documentation**
MTBF	100,000 hours
Certificates	EN 55032, EN 55035, EN 61000-6-1, EN 61000-6-2, EN 61000-6-3, EN 61000-6-4, EN 62368-1, EN 63000, AS/NZS CISPR32, 47 CFR Part 15b, NRTL
Protocols	DHCP (client and server), DNS, ICMP, IGMP v3, IPv4, IPv6, HTTP, HTTPS, FTP, FTPS, NFS, NTP (client and server), MQTT, RTP, RTCP, RTSP, SFTP, SIP (client and server), SMB/CIFS, SNMP, SMTP, SSL/TLS 1.3, TCP, UDP, VLAN, VPN, Zeroconf/mDNS
Manufacturer warranty	5 years

Image and Video Properties

Feature	Properties
Available video codecs	H.264, H.265, MxPEG+, MJPEG
Image resolutions	VGA 640x360, XGA 1024x576, HD 1280x720, FHD 1920x1080, QHD 2560x1440, 4K UHD 3840x2160 (8MP), FHD[2] (1080x1080; 1:1)*, UHD[2] (2160x2160; 1:1)* Hemispheric Sensor module 8DN016 required
Multi streaming	H.264, H.265 with up to 4 streams (2 per sensor)
Multicast stream via RTSP	Yes
Max. frame rate	MxPEG: 20@4K, H.264: 30@4K, H.265: 30@4K

General Software Features

Feature	Properties
WDR	Up to 120 dB
Software features	▪ H.264, H.265 Multistreaming ▪ Multicast stream via RTSP ▪ Digital pan, tilt, zoom/vPTZ (up to 8x zoom) ▪ Genetec protocol integration ▪ Programmable exposure zones ▪ Snapshot recording (pre/post-alarm images) ▪ Continuous recording ▪ Event recording ▪ Time-controlled flexible event logic ▪ Weekly schedules for recordings and actions ▪ Event video and image transfer via FTP and email ▪ Playback and QuadView via web browser ▪ Animated logos on the image ▪ Master/Slave functionality ▪ Privacy zone scheduling ▪ Remote alarm notification (network message) ▪ Programming interface (HTTP API) ▪ MxMessageSystem ▪ MQTT (Message Queuing Telemetry Transport)
ONVIF compatibility	Profile S/G/T
Master/Slave functionality	Yes
Remote alarm notification	Email, MQTT, MxMessageSystem, network message (HTTP/HTTPS), SNMP, SIP

Feature	Properties
DVR/image storage management	■ On internal microSD card ■ On external USB and NAS devices ■ Different streams for live image and recording
Camera and data security	FIPS 140-3 validated encryption (OpenSSL 3.1.2, NIST CMVP #4985), VPN with FIPS-certified library, HTTPS with custom X.509 certificates (TLS), AES encryption at rest (microSD / NAS), role-based access control, IP-level access control list, audit trail / web server access log, intrusion detection with automatic IP lockout, IEEE 802.1X port-based network access control, digital image signature
Firmware Tampering Detection	Digital Signature

Video Analysis

Feature	Properties
Video motion detection	Yes
MxActivitySensor	Version 1.0, 2.1
MxActivitySensorONE	Motion and Loitering Detection of Person and Vehicles

Video Management Software

Feature	Properties
MOBOTIX HUB	Yes **www.mobotix.com > Services > Download Center > Software Downloads**
MxManagementCenter	Yes (latest version recommended) **www.mobotix.com > Services > Download Center > Software Downloads**
MOBOTIX LIVE App	Yes, available in Google Play Store (Android) and Apple App Store (iOS).
3rd Party VMS Software	See ONVIF Profile S/G/T specification

Accessories

NOTE!

Accessories are not part of the scope of delivery.

Sensor Modules

Standard Sensor Modules (4K Day & Night)

Lens	Sensor	Order Code
Fixed lens 120° WIDE	4K Sensor as D/N IR Cut / Microphone	Mx-ONE-SMA-8DN040
Fixed lens 95° WIDE	4K Sensor as D/N IR Cut / Microphone	Mx-ONE-SMA-8DN050
Fixed lens 60° WIDE	4K Sensor as D/N IR Cut / Microphone	Mx-ONE-SMA-8DN080
Fixed lens 45° STANDARD	4K Sensor as D/N IR Cut / Microphone	Mx-ONE-SMA-8DN100
Fixed lens 30° TELE	4K Sensor as D/N IR Cut / Microphone	Mx-ONE-SMA-8DN150
Fixed lens 15° TELE	4K Sensor as D/N IR Cut / Microphone	Mx-ONE-SMA-8DN280
Fixed lens 180° HEMISPHERIC	4K Sensor as D/N IR Cut / Microphone	Mx-ONE-SMA-8DN016-V

Technical Specifications Sensor Modules

Feature	Properties
IK protection class	IK10
IP / NEMA protection class	IP66 / NEMA 4X
Microphone	Microphone (integrated in ONE sensor modules): ▪ Sensitivity: −41 dB FS ±1 dB ▪ SNR 68 dBA ▪ AOP 133 dB SPL
Dimensions (height x width x depth)	Standard Sensor Modules: 50 x 61.5 mm Hemispheric Sensor Modules: 50 x 56.5 mm
Weight	Standard Sensor Modules: 100 g Hemispheric Sensor Modules: 120 g
Housing	PBT-30GF
Manufacturer warranty	5 years

Dimensions Sensor Modules

Standard Sensor Module **Hemispheric Sensor Module**

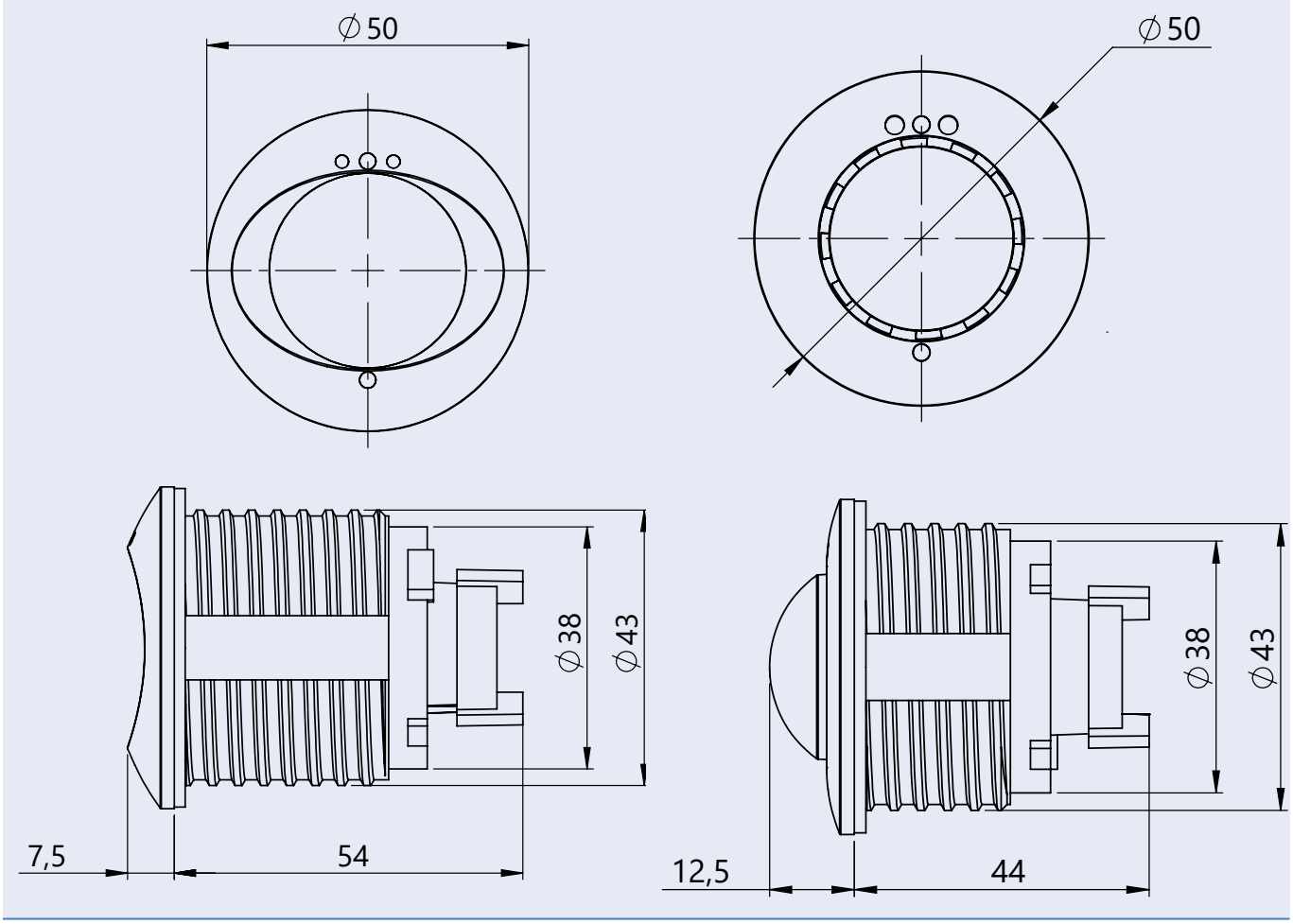

Thermal Sensor Modules

Sensor Module	Order Code
VGA Thermal Radiometry 95° x 76°	Mx-ONE-SMA-640R050
VGA Thermal Radiometry 50° x 40°	Mx-ONE-SMA-640R100

Technical Specifications

Feature	Properties
Thermal sensitivity	Typ. 50 mK, IR range 7.5 to 13.5 µm
Temperature measurement range	
Thermal image sensor	Uncooled microbolometer, VGA: 640 x 480 px

Feature	Properties
Max. image size	Can be scaled up to 3072 x 2048 (6MP), automatically scaled to size of MX sensor module
Max. frame rate	9fps
Pixel pitch	17µm
Field of view	**Sensor Module (A Models)** / **FoV** 640R050 / 95° x 76°; focal length 4.9 mm; f/1.1 640R100 / 50° x 40°; focal length 4.5 mm; f/1.2
Operating temperature	-40° to +65°C / 40° to 149°F
Relative humidity	5 % to 95 %, non-condensing
Power consumption	CIF: 1W VGA: 1.2W
MTBF	80,000 hours
IP rating	IP67
IK rating	IK04
Material	PBT-30GF (housing); Germanium (lens)
Software (included)	Video management software MxManagementCenter

Dimensions Thermal Sensor Modules

Mx-ONE-SMA-640R050

Front

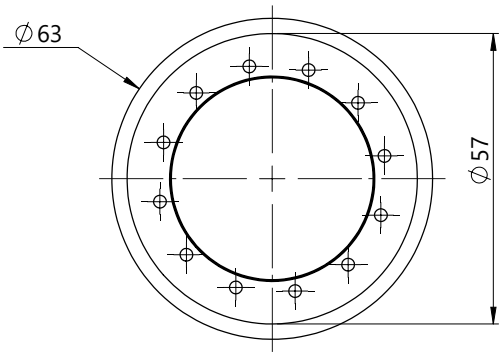

Rear

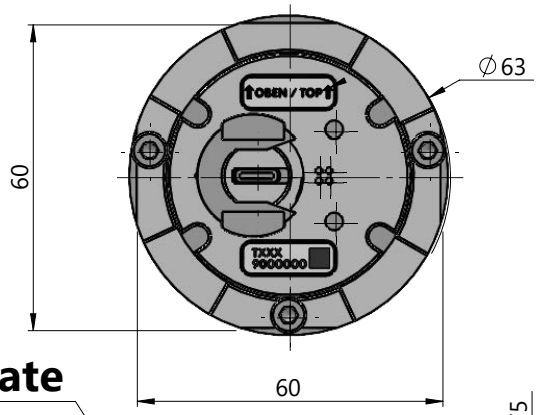

pressure plate

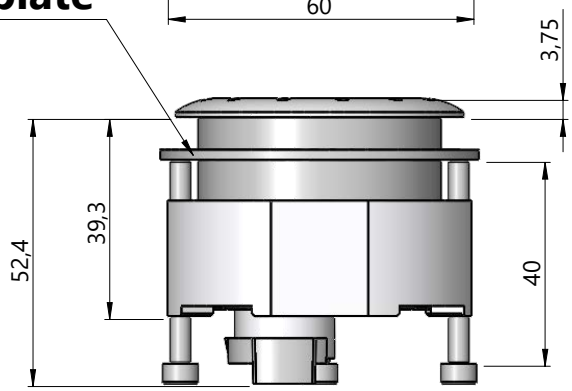

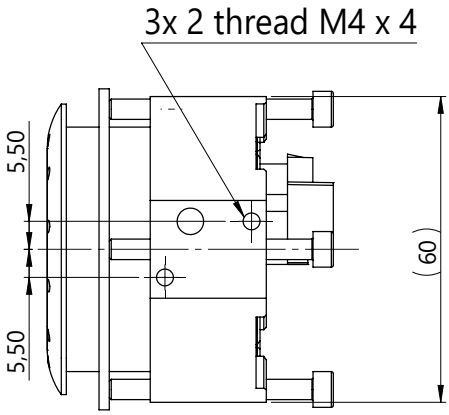

Bottom

short housing for:
-VGA 95°

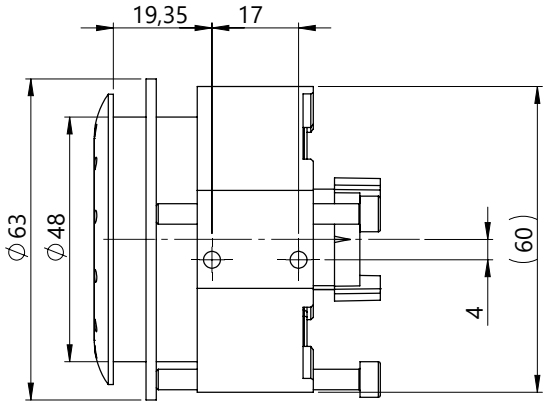

Side

Mx-ONE-SMA-640R100

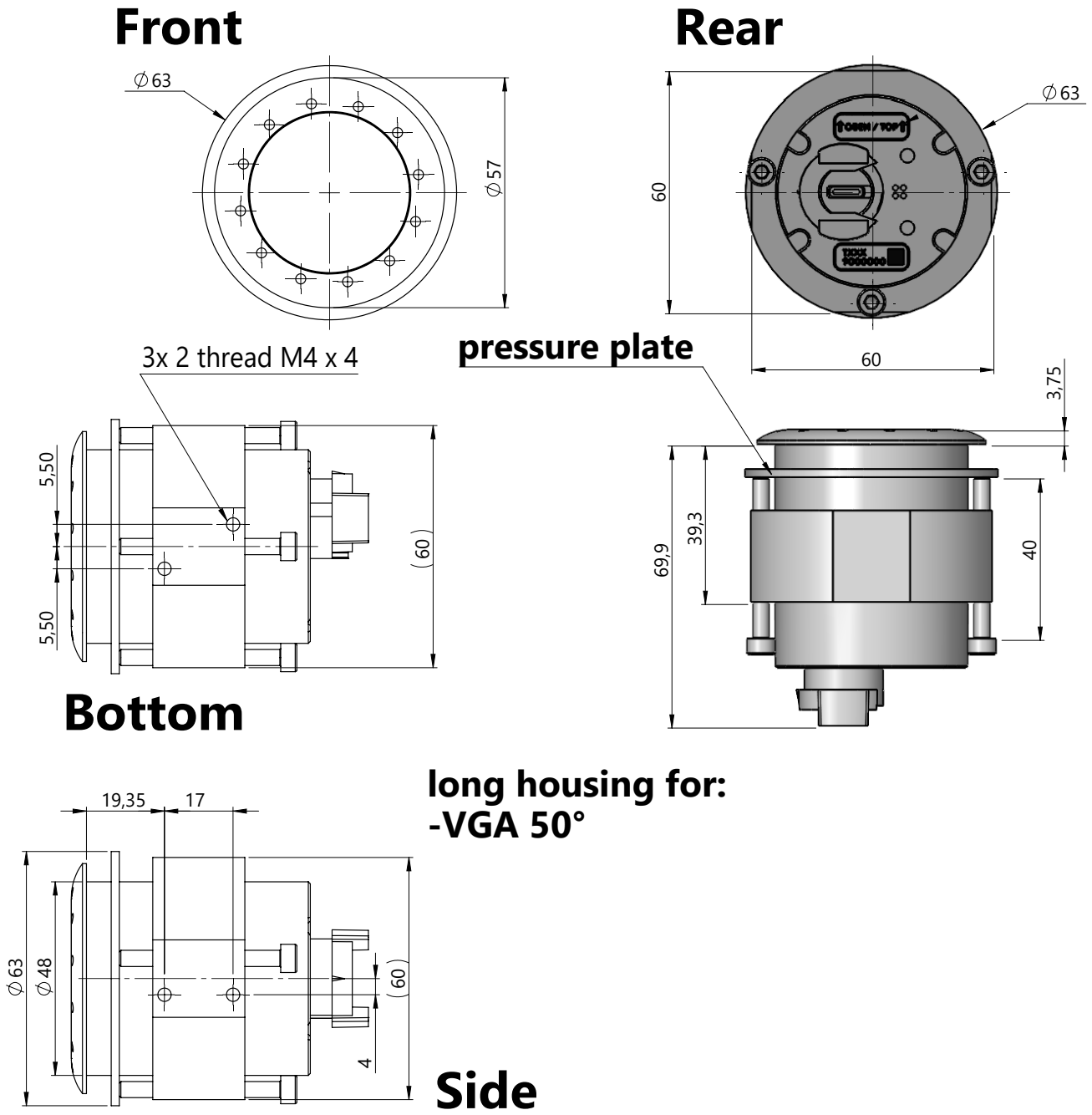

Module Cables

Module Cable	Description	Order Code:
Sensor cable 1m straight-angled	Sensor cable straight-angled, length 1 m/3.3 ft. ■ For connecting optical sensor modules and thermal sensor modules to the ONE S1x camera body. ■ Required for audio signals from the microphone in the sensor module.	Mx-ONE-CBL-S01-AN
Sensor cable 2m straight-angled	Sensor cable straight-angled, length 2 m/6.6 ft. ■ For connecting optical sensor modules and thermal sensor modules to the ONE S1x camera body. ■ Required for audio signals from the microphone in the sensor module.	Mx-ONE-CBL-S02-AN
Sensor cable 5m straight-angled	Sensor cable straight-angled, length 5 m/16.4 ft. ■ For connecting optical sensor modules and thermal sensor modules to the ONE S1x camera body. ■ Required for audio signals from the microphone in the sensor module.	Mx-ONE-CBL-S05-AN

Mounts

NOTE! Mount Compatibility

- Mounts from previous camera generations may show color variations.
- An S16 PTMount purchased before January 2020 is not compatible with a S ONE DUAL module.
- The following sensor module mounts from previous camera models are compatible:

Mount Type	Description	Order Code:
On-Wall Kit for PTMount, white	On-Wall Kit for PTMount, white incl. mounting parts.	Mx-M-PTMA-OW
PTMount, white	Three axis adjustable mount	Mx-M-PTMA
SingleMount, white	For surveillance of one area with one sensor module	Mx-M-SLMA
DualMount, white	For surveillance of one to two areas with two sensor modules	Mx-M-DLMA

Dimensions

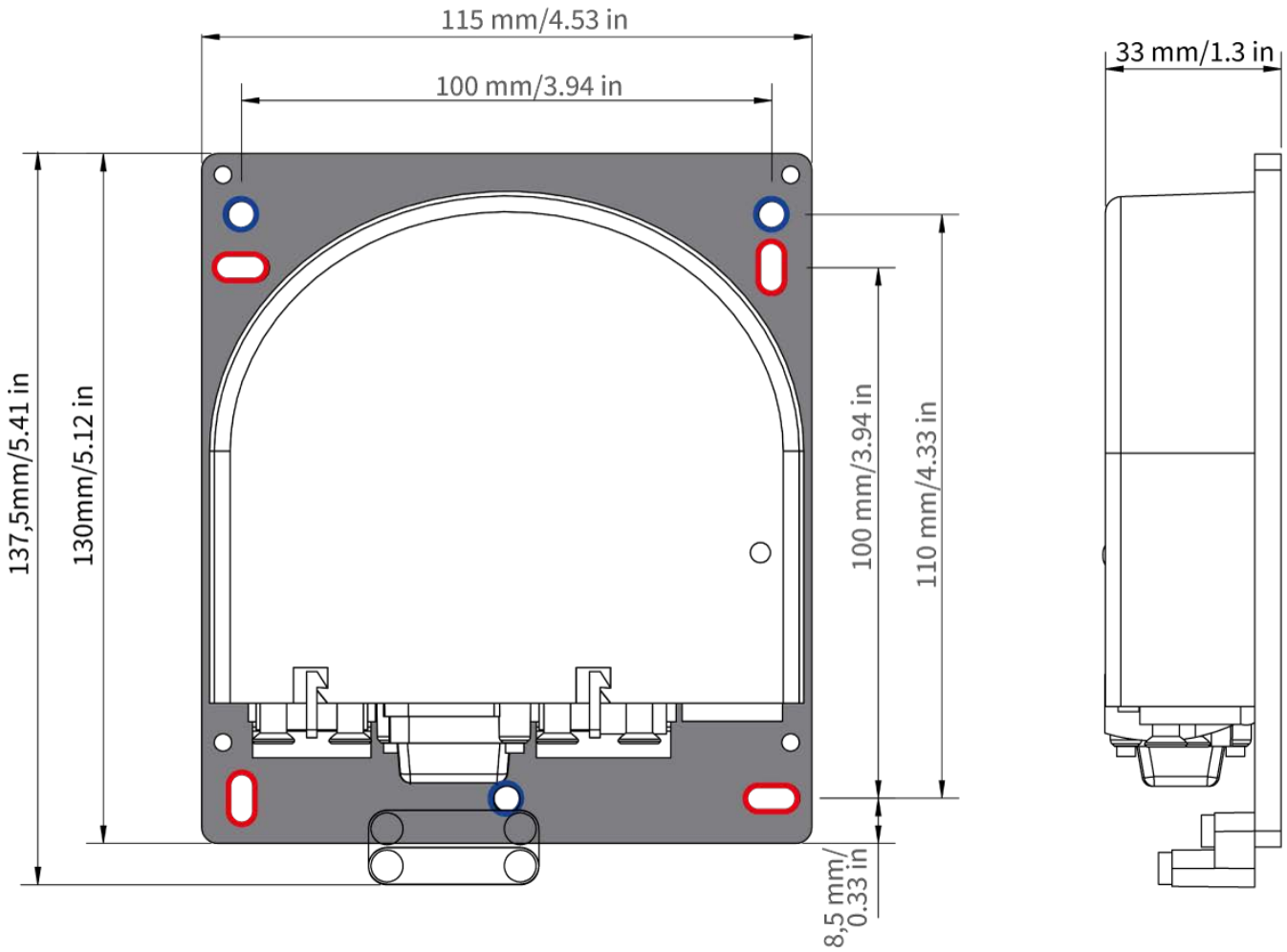

NOTE!

Drilling template: **www.mobotix.com > Services > Download Center > Marketing & Documentation > Drilling Templates**.

5

Mounting

Before Mounting the Camera **32**

Protective Measures 32

Installing Sensor Modules **33**

Preparing the Sensor Modules 34

Installing Sensor Module without Mounts 34

Installing Sensor Module with PTMount 35

Installing the BlockFlexMount 42

Connecting the Camera **42**

Connecting Module Cables to the Camera 43

Connecting I/O Devices 45

Connecting the Camera to the Network 47

Mounting the Camera **48**

Adjusting the Camera **49**

Adjust the Lens Focus 49

Before Mounting the Camera

Before mounting the MOBOTIX S ONE DUAL, the following questions should be answered:

- Where and how will the camera be mounted?
- Where and how will the sensor modules be mounted?
- How is the mounting surface level?
- Which other mounting options are available?
- Which accessories might be needed?
- How is the camera connected to the network and how is the power supplied?
- How are the connections furnished from the building?
- What cabling considerations are necessary?

NOTE!
Before mounting the camera

- Determine the optimal installation position and ensure that the field of view is not obstructed. After installation, you can fine-tune the image.
- Ensure that a PoE power supply compliant with PoE (802.3af-2003), Class 3 is available at the installation location (see Connecting the Camera to the Network, p. 47).

CAUTION!

- Install only on a flat surface! Unevenness must not exceed 0.5 mm/0.02 in!
- Only use genuine MOBOTIX patch cables to guarantee the weatherproofness!

If you have questions, please ask your MOBOTIX partner directly or contact the MOBOTIX support under **www.mobotix.com > Services > Help Desk**.

Protective Measures

WARNING!
When laying cables indoors and outdoors, the current regulations for cable laying, lightning and fire protection must always be observed.

MOBOTIX cameras and devices are protected against the effects of minor over voltages by a number of measures. However, these measures cannot prevent larger surge voltages from causing damage to the camera. When installing the cameras outdoors, special attention should therefore be paid to lightning protection and the associated dangers for the building and network infrastructure.

In general, you should only have MOBOTIX cameras and devices installed by certified specialist companies that are familiar with the installation and safe operation of network devices and the underlying regulations for lightning and fire protection as well as the current technology for preventing damage from surge voltages.

Notes on Cabling

- **Data cable:** Only double-shielded CAT5 cable or better (S/STP) may be used as data cable for the Ethernet interface.
- **Cable length:** The individual cable sections must not exceed the maximum permissible lengths in order to ensure perfect data transmission.
- **Avoidance of induction:** Data cables may only be laid parallel to power or high-voltage lines if the prescribed minimum distances are observed.

Fire Protection

When laying cables for the power supply, the relevant country-specific regulations (e.g. VDE in Germany) and the fire protection regulations valid at the installation site must be observed.

Lightning and Surge Protection

Measures should always be taken to protect this device from electrical surge damage.

NOTE!
Electrical surge protection available using the MX-Overvoltage-Protection-Box, which is available as an accessory.

Further information on how to avoid damage caused by lightning and over voltage is available from manufacturers of lightning and over voltage protection devices.

Installing Sensor Modules

WARNING!
Make sure the power supply to the camera is disconnected before installing or replacing sensor modules.

CAUTION!
When installing the sensor modules, make sure that the sensor module cables are not damaged or bent sharply!

Preparing the Sensor Modules

Remove the plastic nut ① from the sensor modules, remove the bayonet catch ② by rotating it counter-clockwise, then remove the blue rubber plug ③ .

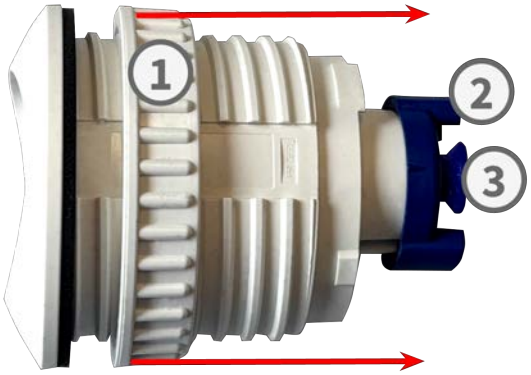

Proceed by Installing the Sensor Modules

- Installing Sensor Module without Mounts, p. 34
- Installing Sensor Module with PTMount, p. 35

Installing Sensor Module without Mounts

A sensor module can be easily and discreetly installed in a drywall, for example.

1. **Mount the sensor module:** Insert sensor module into hole (43 mm) ① and tighten the plastic nut ② to keep the sensor module safely in place

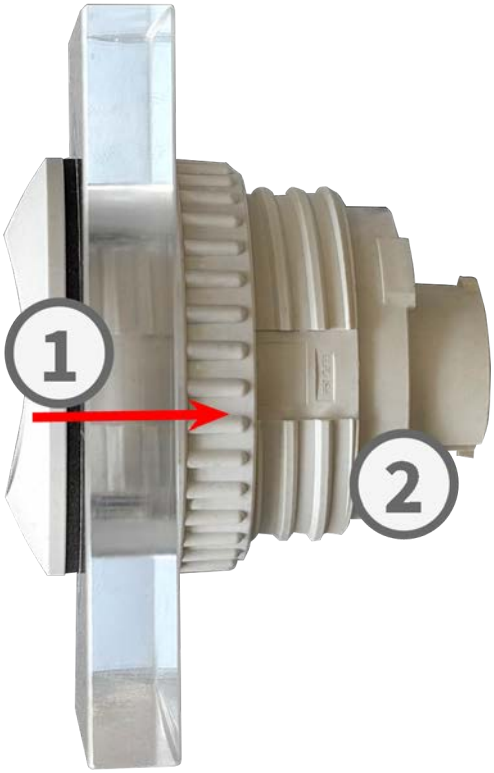

2. **Connect the sensor module cable:** Push the plug of each sensor module cable **firmly** into the connector at the back of the module until the connector is fully inserted into its seat.

> **NOTE!**
> The lug of the plug must point to the inside of the sensor module when plugged in. If the module cable is not plugged in correctly, the sensor will not be recognized by the camera.

3. **Lock sensor module cable:** Apply the blue bayonet catch onto the connector of the sensor module as shown and turn it clockwise until it gently snaps shut.

4. Repeat steps 1 to 4 to add additional sensor modules, respectively.

Installing Sensor Module with PTMount

> **CAUTION!**
> The PTMount was developed for wall or ceiling mounting. When mounting on the floor, make sure that there is no cavity inside the PTMount where water could collect.

1. Using the 2.5 mm Allen wrench, remove the two screws that hold the foot onto the swivel ring.

2. Remove swivel ring and base plate.

3. Make sure that there is enough space for installing the PTMount and that you can access it from the rear later on. The surface should be even and smooth so that the sealing lies flat on the surface.

4. Drill the holes for the base plate using the drilling template and insert the dowels PM.8, p. 16.

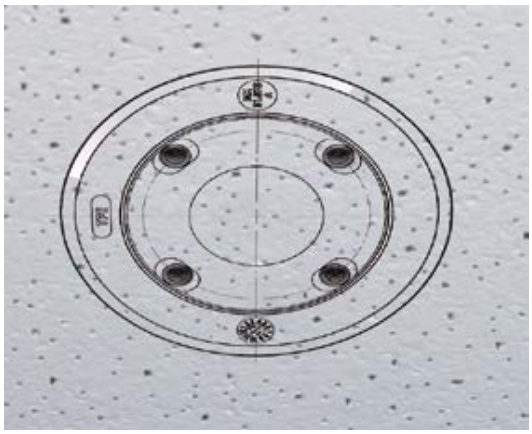

5. In the center of the drilling template, drill another hole into the wall or faceplate for the sensor module cable. The hole should have a diameter between 15 and 35 mm.

6. Hold the sealing, the swivel ring and the base plate as shown in the figure.

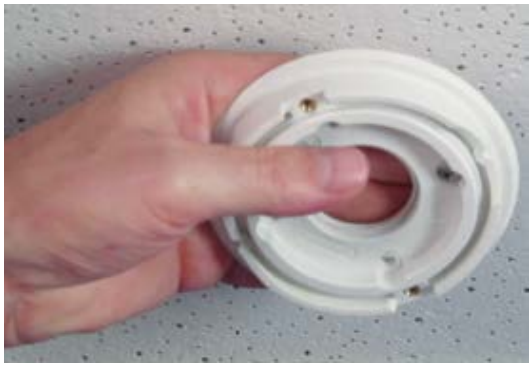

7. Attach the base plate using the supplied wood screws and washers.

8. When tightening the screws, make sure that you can still rotate the swivel ring by hand.

9. Guide the sensor cable through the sealing, the swivel ring, the base plate and through the mounting surface to the camera.

10. Guide the sensor cable from the back into the foot and the sphere.

11. Use the two screws to affix the foot and sphere assembly to the swivel ring and make sure that the foot can still be rotated.

12. Loosen the two fastening screws of the insert ① , then rotate the insert so that the small bar opposite of the **TOP/OBEN** label points to the hole of the grub screw ② .

13. Secure the insert against rotating by tightening the two fastening screws using the 2.5 mm Allen wrench.

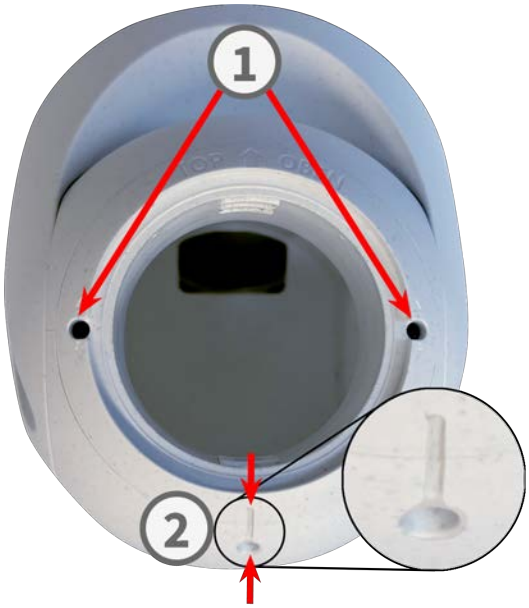

14. Attach the sensor module cable to the sensor module (turn blue bayonet catch to the left and remove, pull out the plug, connect the sensor cable, apply bayonet catch and lock by turning to the right).

15. Push the sensor module into the PTMount so that the arrow on the backside of the sensor module points to the left vs. the **TOP/OBEN** lettering.

16. Using the module wrench lock the sensor module by turning it 90 degrees to the right.

17. Secure the sensor module by tightening the grub screw using the 2.5 mm Allen wrench. The grub screw locks the sensor module within the insert and prevents inadvertent unlocking of the sensor module.

18. Adjust the sensor module temporarily by pointing it into the desired viewing direction.

19. Make sure that the **TOP/OBEN** label on the insert is pointing upwards. If this is not the case, loosen the two fastening screws ① using the 2.5 mm Allen wrench and rotate the insert.

Installing the BlockFlexMount

The BlockFlexMount has been designed for integration into other devices. It uses the same technology as the “regular” sensor modules, but in a black anodized aluminum housing.

Thanks to the tap holes on each side and the holes for machine bolts, the BlockFlexMount is easily integrated into any given structure or device.

Connecting the Camera

All connections to the camera (network, USB-C, inputs/outputs) can be made directly on the camera. No further accessories are required for this. A PoE switch provides the camera's power supply.

Connecting Module Cables to the Camera

WARNING!
Make sure the power supply to the camera is disconnected before installing or replacing sensor modules.

CAUTION!
When installing the sensor modules, make sure that the sensor module cables are not damaged or bent sharply!

One or two sensor modules can be connected to the camera.

1. To access a sensor module connector (M1 & M2), push away the safety clip ① from the sealing plug, then remove the sealing plug ② .

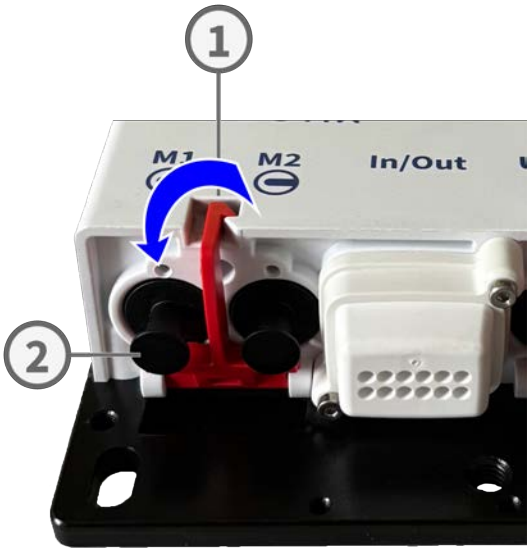

2. Plug the module cable into the module connector so that the small lug ③ plug fits into the module connector.

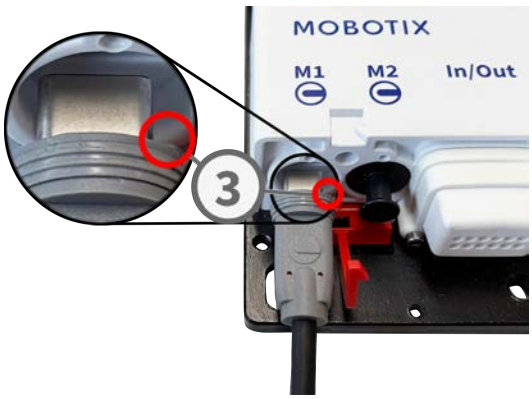

NOTE!
If the module cable is not plugged in correctly, the sensor is not recognized by the camera.

3. Set the safety clip back into place.

Connecting a USB-C Device

The camera has a USB-C port that allows connecting external storage media or extension boxes, for example.

1. To access the USB-C port, push away the safety clip ① from the sealing plug, then remove the sealing plug ② .

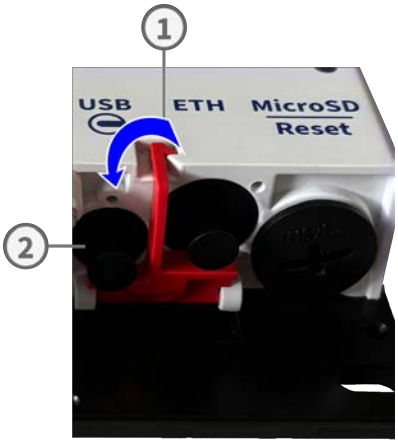

2. Plug the USB-C connector ③ into the port and press in firmly. Then set the safety clip back into place.

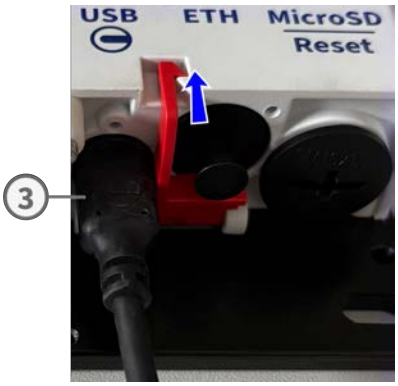

3. Connect the USB-C device to the USB cable.

Connecting I/O Devices

The MOBOTIX S ONE DUAL has an I/O terminal that allows connecting multiple I/O devices.

I/O Terminal Pin-Out

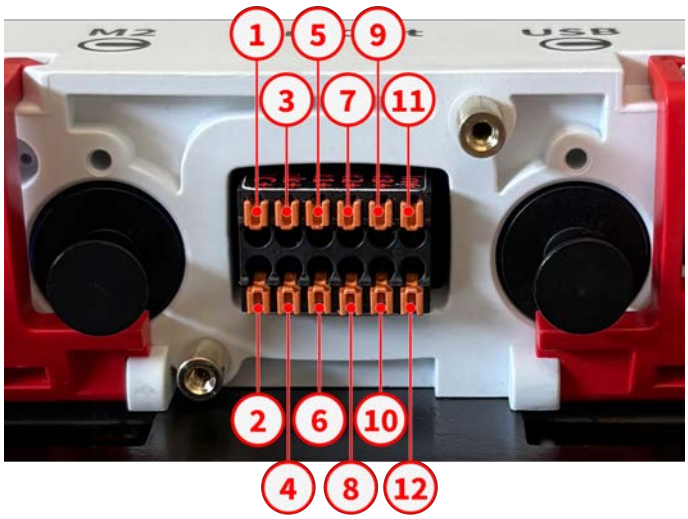

① DC +	② DC –	③ Spk +	④ Spk –
⑤ Out1 +	⑥ Out1 –	⑦ Out2 +	⑧ Out2 –
⑨ Out3 +	⑩ Out3 –	⑪ In +	⑫ In –

CAUTION!
Before you proceed pay attention to the intended use or polarity of the slots. Ensure that the connections are assigned correctly as shown in the overview diagram above.

1. To access the I/O connectors, release the screws ① from the I/O cover, then remove it.

2. Strip 5 mm of insulation from the ends of the connection wires of the I/O devices and push the wires through the openings in the I/O cover corresponding to the appropriate I/O slots.

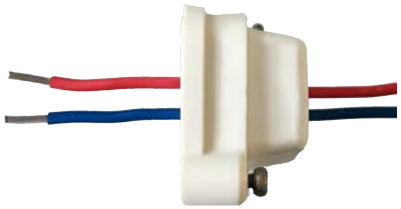

3. Plug the connection wires of the respective units into the corresponding slots ② (see I/O Terminal Pin-Out, p. 46) of the connection terminal and check their tight fit.

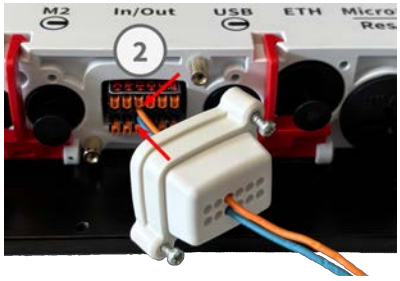

4. Attach the I/O cover and fasten the screws ③ .

Connecting the Camera to the Network

NOTE! Before connecting the camera:

- Ensure that the PoE switch complies with PoE (802.3af-2003), Class 3 and supports a 100/1000 Mbps Ethernet interface.
- MOBOTIX recommends using an uninterruptible power supply (UPS) for the switch.
- The maximum network cable length for PoE is 100 m (328 ft).

Connect the supplied patch cable 1.2, p. 14 with the PoE network connection of the building.

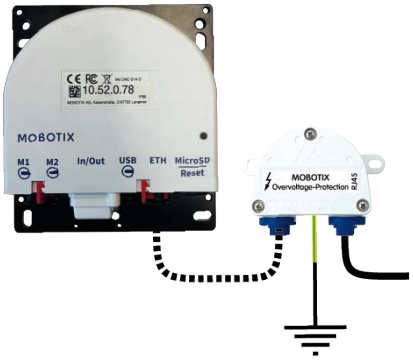

NOTE!

MOBOTIX recommends connecting the camera using an MX-Overvoltage-Protection-Box (RJ45 or LSA). This provides a weatherproof (IP66) network and power connection with surge protection of up to 4 kV.

For more information, refer to the corresponding manual on the MOBOTIX website: **www.mobotix.com > Services > Download Center > Marketing & Documentation**

Mounting the Camera

CAUTION!

- Install only on a flat surface! Unevenness must not exceed 0.5 mm/0.02 in!
- Only use genuine MOBOTIX patch cables to guarantee the weatherproofness!

Before mounting the MOBOTIX S ONE DUAL and sensor modules, determine the ideal positions and make sure that the filed of view is not obstructed in any way. Once the modules have been mounted, you can fine-tune the image. If the monitored area changes or the camera has to be installed in a different location, you can exchange the sensor modules.

NOTE!

Drilling template: **www.mobotix.com > Services > Download Center > Marketing & Documentation > Drilling Templates**.

NOTE!
Do not use the dowels if the installation surface is wood. Only use the screws to fasten the mounting plate directly on the surface. In order to facilitate screwing in wood, the positions should first be pre-drilled using a 2 mm drill bit, for example (drilling depth just slightly less than screw length).

1. **Drill the holes for the dowels:** Mark the holes for the dowels using the drilling template (see Drilling Template, p. 11). When drilling, use an 8 mm drill bit and drill holes with at least 60 mm/1.2 in depth.
2. Fully push the dowels M.2, p. 15 into the holes you drilled.

3. **Install the mounting plate:** Place the Camera over the drilled holes ① and use the four screws M.3, p. 15 with one washer M.1, p. 15 each and the Phillips screwdriver to mount the plate to the wall.

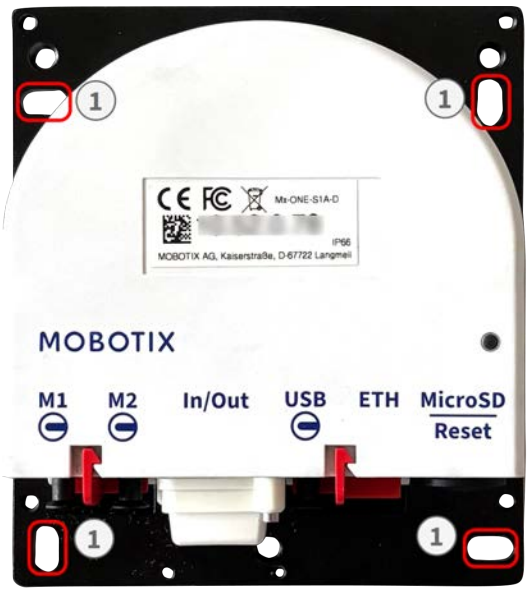

Adjusting the Camera

Adjusting the camera at the mounting position will ensure that you will see the desired field of view later on.

To finish the installation of the MOBOTIX S ONE DUAL, the connections of the camera are established and the camera is mounted onto its final position. The installation is finished by applying the remaining cover plugs to ensure the water-proofness of the housing.

Adjust the Lens Focus

Once the camera has been installed, the lens should be checked for proper image sharpness and manually adjusted.

The focusing aid provides a visual aid when correcting the image sharpness (see "The Live Screen of the MOBOTIX Camera" in the camera's online help).

NOTE!
When adjusting the image focus or the field of view of the camera, always make sure that you can see the live image of the camera on your monitor.

1. Show the live image of the camera on the monitor (see Access the Camera in the Web Browser, p. 62).
2. **Remove the lens protection glass:** Place the lens wrench on the notches of the lens protection glass and rotate it to the left until it slides off the lens.

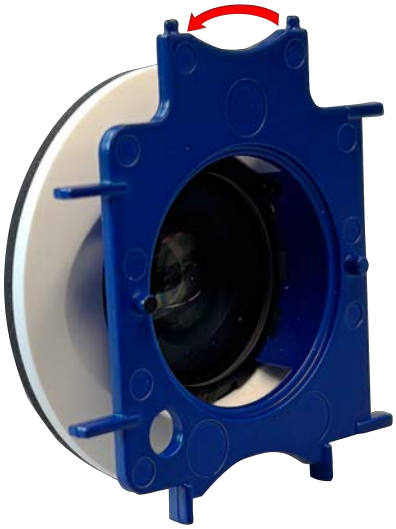

> **NOTE!**
> You may need to carefully leverage out the protective glass (e.g., with a small screwdriver).

3. **Adjust the image sharpness:** Place lens wrench (**with the ring-shaped side**) on the lens and rotate it carefully to the right or left until the image on the monitor meets your requirements.

> **CAUTION!**
> Do not turn the lens too far or with force to avoid damaging the image sensor.

4. **Reinsert the protective glass:** Turn it with the lens wrench to the right as far as it will go.

6

Operating the Camera

Getting Started **52**

LED States 52

Boot Options of the Camera **52**

Network Settings **54**

Initial Camera Setup 54

Automatic Setup using MxManagementCenter 58

Network Settings on the Camera in the Web Browser 60

Getting Started

You can use the MOBOTIX S ONE DUAL with any current browser – or with MxManagementCenter.

NOTE!
You can download MxManagementCenter free-of-charge from **www.mobotix.com > Services > Download Center > Software Downloads**.

1. **Connect the camera to the network:** The network cable will also provide power to the camera (see Connecting the Camera to the Network, p. 47).
2. **Establish a connection to the camera:** Follow the instructions on how to access the camera as outlined in Initial Camera Setup, p. 54.
3. **Configure camera:** You can use the user interface of the camera in a browser or in MxManagementCenter.

LED States

The camera LED on top of the camera body displays the following states by default:

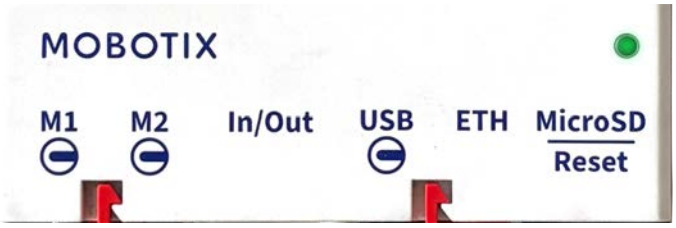

LED status	Meaning
Green steady on	Normal operation
Green steady flashing	Technical error or misconfiguration

Boot Options of the Camera

By default, the camera starts as DHCP client and automatically tries to get an IP address from a DHCP server. To start the camera in a mode different from the default mode, you can activate the boot menu of the camera.

NOTE!
Pressing the key of the camera will let the camera announce the current IP address of the camera on the speaker (if a speaker is attached to the camera).

CAUTION!
When opening the camera, do not insert any objects into the housing. This could damage the camera!

1. Disconnect the camera's power supply.
2. **Open the SD card housing:** Loosen the threaded plug on the housing ① (e.g. using a suitable coin) and remove the plug.
3. Take a suitable tool for operating the boot menu (e.g. the enclosed tweezers Mounting Supplies: Scope of Delivery, p. 15), **but do not use a paper clip or pointed objects!**
4. Reconnect the power supply of the camera.

5. **Activate the boot menu:** The LED at the top of the camera housing lights up 5 to 10 seconds after establishing the power supply and will stay on for 10 seconds. Press the reset key ② with the tool. The camera enters the boot menu, ready for selecting one of the boot options. The LED will flash once. The flash signal will be repeated every second.

> **NOTE!**
> The number of flashes corresponds to the current boot option.

6. **Switch the boot option:** Briefly press the reset button(< 1 sec). After the last boot option, the camera returns to the first boot option (LED flashes once).

7. **Select a boot option:** Press the key longer (> 2 sec). The camera confirms the selection by flashing the LED rapidly for 3 seconds. After 20 sec, the camera will play a sound according to the table below.

LED Flashes	Boot Option	Meaning	Audio Confirmation
1x	•/•	This option is not supported on this camera model.	**•/•**
2x	Factory Defaults	Starts the camera with factory defaults (factory default IP address, users and passwords will not be reset).	**Boing**
3x	Automatic IP Address	Starts the camera as DHCP client and tries to obtain an IP address from a DHCP server. If a DHCP server cannot be found or no IP address can be obtained, the camera starts with its factory default address.	**Boing-Boing**
4x	Backup Operating System	Starts the camera with the recovery system, e.g., in order to recover from a failed update of the camera software.	**Alarm Sound**

8. Close the SD card housing.

NOTE!
If you do not select a boot option, the camera will resume its normal boot process after a certain time.

CAUTION!

- Note that you can restore specific parts of the camera configuration afterwards by using "Restore" to re-apply the settings still stored in the camera.
- As opposed to resetting the camera using **Admin Menu > Reset configuration to factory defaults**, the user information will not be reset if the camera is booted using the factory defaults.
- When starting the camera with DHCP support (option 2), make sure that the network has a properly functioning DHCP server. If this is not the case, the camera cannot obtain a valid IP address and will fall back to its last IP address.
- You should also make sure that the cameras always get the same IP addresses by mapping the MAC addresses of the cameras to the desired IP addresses.

Network Settings

Initial Camera Setup

Check the Preconditions

- Is the camera running (check camera power LED)?
- Is the camera accessible using my current network connection?

- Do I have the necessary information for successfully running the camera on the network?
  - IP address of NTP (*Network Time Protocol*) server.
  - IP address of network gateway (if required).

Access the Camera

1. Start your web browser.
2. Access the camera using its zeroconf address:
   - Look for the factory IP address such as `10.x.y.z` on the sticker on the camera body or the packaging.
   - Enter this address in the address bar of your browser using the following syntax: `mx10-x-y-z.local`.

     EXAMPLE:
     Taking a factory IP address of `10.32.24.129` as an example, you would enter `mx10-32-24-129.local` in the address bar of your browser.

   - Click on **Admin Menu** and enter the default access credentials (`admin`/`meinsm`).
3. In the **Quick Installation** dialog, select your language, then click on >.

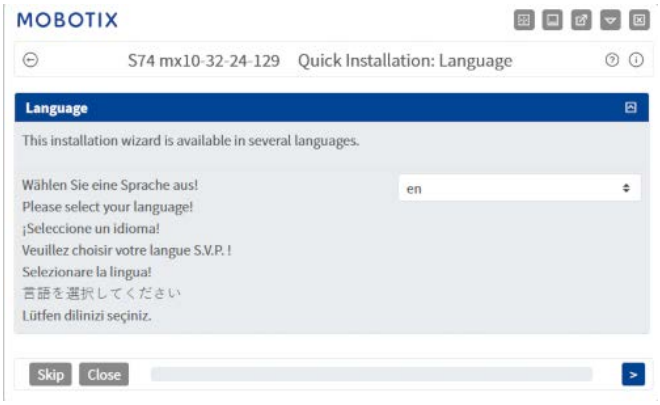

4. Continue clicking on > and do not change any settings until you reach the **Security** dialog.

   Set a password for the admin user of the camera. Make sure you keep the password in a safe place.

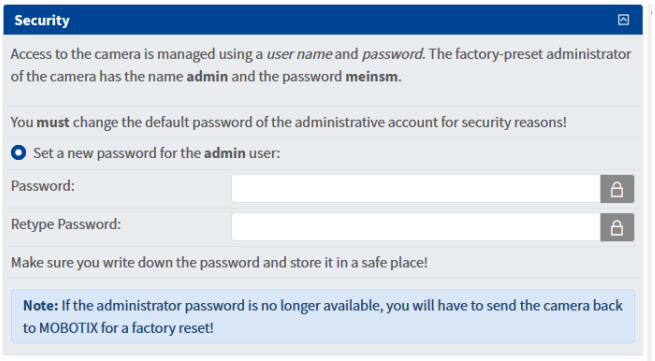

> **NOTE!**
> Make sure to record the new password in the system documentation!

5. Continue clicking on > and do not change any settings until you reach the **Country Settings** dialog.

   Check the time zone and adjust it, if necessary.

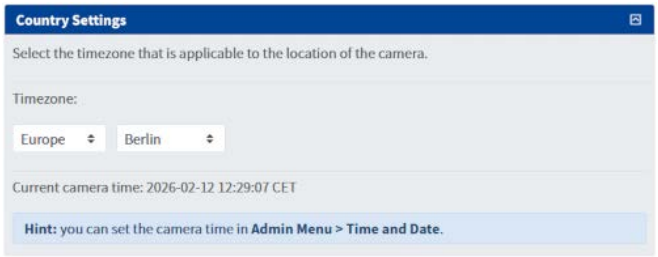

6. Click on > and in the **Audio Settings** dialog, activate the devices that are available for this camera.

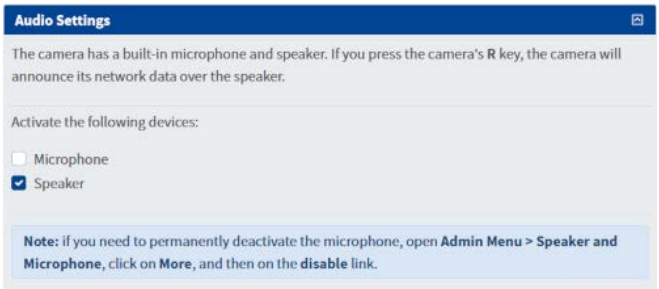

7. Click on > and in the **Camera Name** dialog, enter a descriptive camera name.

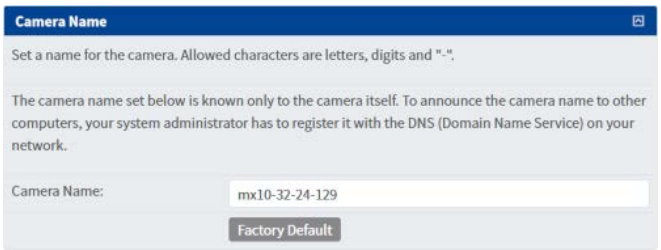

> **NOTE!**
> Make sure to record this camera name in the system documentation!

8. Continue clicking on > and do not change any settings until you reach the **Time Server** dialog.

   Enter the IP address of your network time servers as provided by your network administrator (e.g. `192.168.1.1 ptbtime1.ptb.de`; use spaces to separate multiple addresses).

   If the time server is working properly, the LED to the right of the field turns green. A red LED indicates that the server does not work properly.

9. Click on > and review the information in the **Store Configuration** dialog. If everything is correct, print the page and include it in the system documentation.

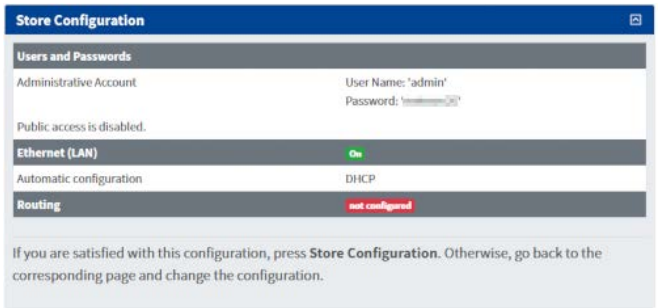

10. Click on **Store Configuration** and then on **Reboot**.

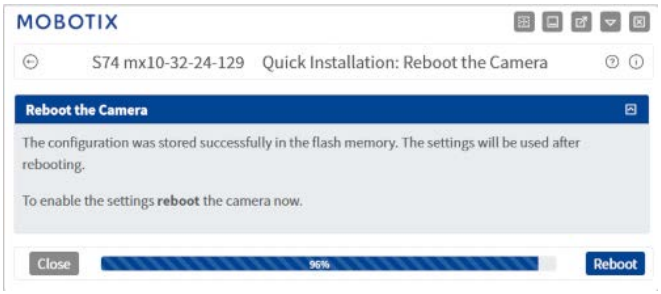

11. Enter the new password you entered in the **Security** dialog when prompted by the camera.

    The camera will now reboot; once it is working again, you will see its live image.

Find the "Real" IP Address of the Camera

Since you are still using the `mx10-32-24-129.local` zeroconf address, you need to find out the actual IP address of the camera.

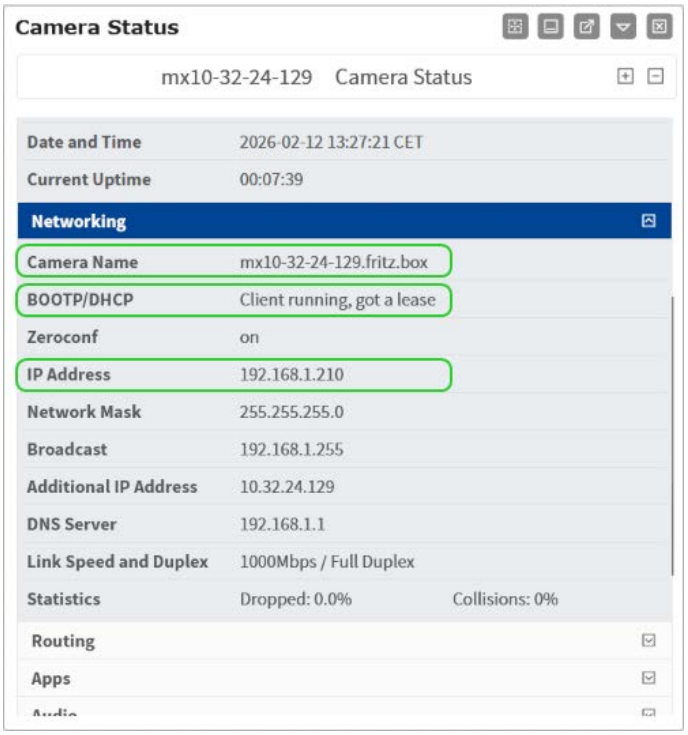

1. Click on the **Show Camera Status** icon ⓘ.
2. In the **Camera Status** dialog, click on **Networking**.
   - The **Camera Name** entry shows the camera's current fully qualified domain name.
   - The **BOOTP/DHCP** status *Client running, got a lease* shows that the camera properly received an IP address.
   - The **IP Address** entry shows the camera's current address.
3. You can use either the **Camera Name** (e.g. `mx10-32-24-129.fritz.box`) or the IP address (e.g. `192.168.1.210`) to access the camera from now on.
4. Open a new browser tab and enter the address (e.g. `mx10-32-24-129.fritz.box` or `192.168.1.210`), then enter the access credentials (`admin/<your new password>`).

> **NOTE!**
> Make sure to record this address in the system documentation together with the camera name!

Automatic Setup using MxManagementCenter

This section describes how to use MxMC to connect the camera and configure its network settings.

MxManagementCenter is a video management software for setting up and using the entire video surveillance system that provides a range of functions for different tasks and user groups. You can download the newest release of MxManagementCenter from the MOBOTIX website (www.mobotix.com > Services > Download Center > Software Downloads, MxManagementCenter section).

Network Settings on the Camera in MxMC

When starting MxManagementCenter for the first time, the configuration wizard opens and automatically starts searching for MOBOTIX cameras. The number of detected cameras is shown next to the **Add Devices** icon.

1. Click on **Add Devices**. The cameras are displayed either in a list or as tiles. Use the List and Tile buttons to change the display mode.

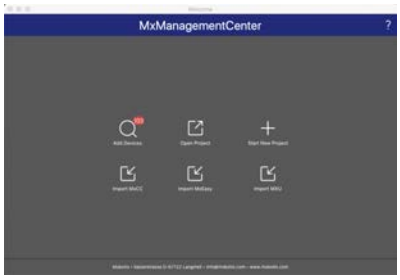

The application automatically monitors and displays the operating status of all cameras using corresponding icons.

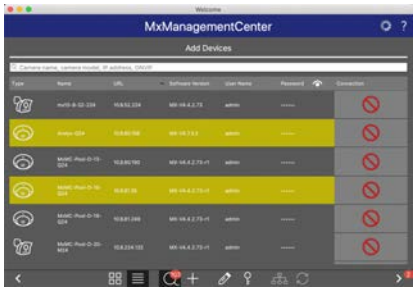

EXAMPLE:

- The camera is not in the same subnet as the computer.
- The user name and password of the camera are not known.

NOTE!
Using the Bonjour service (en.wikipedia.org/wiki/Bonjour_(software)), the application finds not only MOBOTIX cameras on the same subnet, but also in other subnets. Normally, you would not be able to establish any connection to cameras in a different network or subnet.

NOTE!
This is the case, for example, if you are integrating cameras into a network without DHCP server (i.e. with fixed IP addresses) and the IP address range is different from the 10.x.x.x range supported by the cameras in addition to DHCP.
MxManagementCenter can automatically configure such a camera so that it is "integrated" into your existing network.

2. Select the camera you want to set up and click on **Edit Network Settings** at the bottom of the program window. The **Change Network Settings for Selected Devices** dialog opens.
3. Enter the IP address and the subnet mask of the selected camera.

NOTE!
The IP addresses of the other cameras are automatically incremented by 1.

4. Click on **Apply** to apply the settings.

> **NOTE!**
> For more information on this feature, please read the MxManagementCenter online help or the Tutorial (see www.mobotix.com > Services > Download Center > Documentation > Brochures & Guides > Tutorials).

Network Settings on the Camera in the Web Browser

1. Use a web browser to access the web interface of the MOBOTIX camera and enter the factory IP address (e.g. `10.16.0.99`).

> **NOTE!**
> When you access the web interface for the first time, you will need to assign a new password for the admin user.

> **CAUTION!**
> If the administrator password is no longer available, the camera must be returned to MOBOTIX for a factory reset.

2. Click on the **Admin Menu** button in the user interface of the camera. The Quick Installation Wizard automatically starts after entering the access credentials of the admin user.

> **NOTE!**
> You can also run the Quick Installation Wizard later on (**Admin Menu > Network Configuration > Quick Installation**; see Reference Manual).

3. Enter the network parameters of the camera in the course of the quick installation.

> **NOTE!**
> You can also change the network parameters later on by running **Admin Menu > Network Configuration > Quick Installation**.

4. Reboot the camera to apply the network settings.

7

Camera Software in the Browser

Access the Camera in the Web Browser 62
Basic Settings 62

Access the Camera in the Web Browser

Once the power and network connection of the MOBOTIX have been established, you can access the interface of the camera software in a web browser.

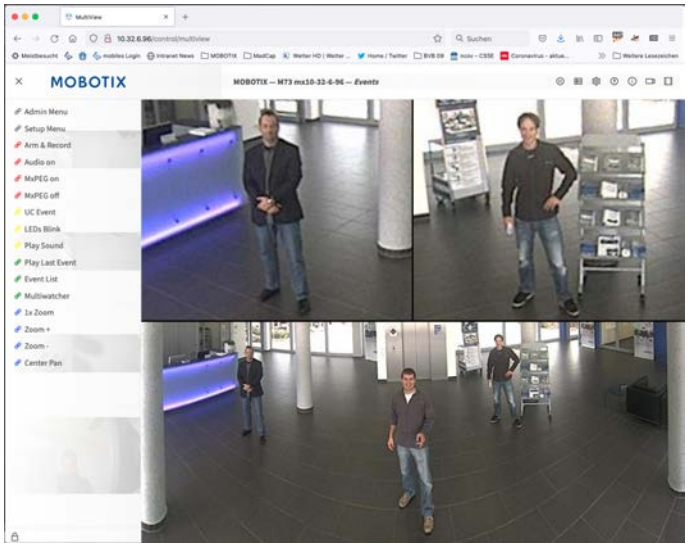

- Enter the camera's IP address in the address field of a web browser.

NOTE!
You can find the IP address of the camera, for example, in the camera housing or on the sticker on the packaging.

Basic Settings

NOTE!
You must change the password when logging in for the first time.

CAUTION!
Make sure that you store information on user names and passwords in a secure place.

If you loose the administrator password and cannot access the Administration menu, the password can only be reset at the factory. This service is subject to a service charge.

The Quick Installation Wizard will appear automatically when accessing the Administration Menu for the first time. It provides an easy method to adjust the basic camera settings to the current application scenario. For security reasons, it is highly recommended to change the default administrator password after the camera has been configured properly.

Administering the camera: You can modify the camera configuration in the Administration Menu or the Setup Menu:

- **Admin Menu:** This menu contains the basic configuration dialogs of the camera (e.g. passwords, interfaces, software update).

- **Setup Menu:** This menu contains the dialogs for configuring the image, event and recording parameters. Some of these settings can be changed using the corresponding Quick Controls in the Live screen.

NOTE!
For more information, consult the Reference Manual of the camera (see **www.mobotix.com > Services > Download Center > Marketing & Documentation > User Manuals**.

8

Maintenance

Replacing the microSD card 66
Cleaning the Camera and Lenses 67

Replacing the microSD card

CAUTION! Risk of equipment damage and data loss!

- Before removing the microSD card, disable recording and reboot the camera.
- Disconnect the camera from the power supply.
- Do not touch the circuit board while replacing the microSD card.
- Ensure that the microSD card is not write-protected.

1. **Deactivate storage:** If storage on microSD card is still activated, deactivate it in the cameras web interface: **Admin Menu > Storage on External File Server / Flash Device**, then reboot the camera.
2. Disconnect the camera's power supply.
3. **Open the SD card housing:** Loosen the threaded plug on the housing ① (e.g. using a suitable coin) and remove the plug.

4. **Unlock the microSD card holder:** Using tweezers, gently press the SD card into the slot ② (as indicated by the arrow) until you hear a click. The card is protruding slightly and can be easily removed with the tweezers.

5. **Remove the microSD card.**

6. **Insert microSD card:** Carefully insert the new microSD card into the slot using tweezers and press it in lightly until it clicks into place.

7. **Activate storage:**

   - Format a new microSD card as outlined in the camera's *Storage on External File Server / Flash Device* online help topic.

   - If the microSD card already is formatted with MxFFS, you can activate storage in **Admin Menu > Storage on External File Server / Flash Device**. After rebooting the camera, recording will automatically resume.

8. **Reboot the camera.**

Cleaning the Camera and Lenses

Clean the camera housing using a mild alcohol-free detergent without abrasive particles.

If lens are dirty from the installation process, clean them using a lint-free cotton cloth. Check the lens focus after cleaning and adjust if required.

To protect the lens protection glass, only use the supplied mounting supplies for disassembly.

Cleaning the lens protection glass

- Use the wide end of the module wrench M.7, p. 15 to remove/install the lens protection glass. The narrow side of the wrench is used to adjust the sharpness (focal length) of the tele lenses.

- You should clean the lens protection glasses and domes regularly using a clean, lint-free cotton cloth. If the dirt is more persistent, add a mild alcohol-free detergent without abrasive particles.

- Make sure you instruct cleaning personnel on how to clean the camera.

MOBOTIX
BeyondHumanVision

EN_10/26
MOBOTIX AG • Am Stundenstein 2 • D-67722 Winnweiler • Tel.: +49 6302 9816-103 • sales@mobotix.com • www.mobotix.com
MOBOTIX is a trademark of MOBOTIX AG registered in the European Union, the U.S.A., and in other countries. Subject to change without notice. MOBOTIX do not assume any liability for technical or editorial errors or omissions contained herein. All rights reserved. © MOBOTIX AG 2019