Quick Installation

MOBOTIX c71 NurseAssist *powered by Kepler Vision Technologies*

© 2026 MOBOTIX AG

BeyondHumanVision

MOBOTIX

Document ID: Mx_QI_Mx-c71B-NurseAssist_V2.21_EN
V2.21, 10/23/2026, Order Code: Mx-c71B-NurseAssist
Document ID: Mx_QI__V_EN

Table of Contents

Table of Contents 2
Before You Start 5
Support 6
MOBOTIX Support 6
MOBOTIX eCampus 6
MOBOTIX Community 6
Safety Notes 6
Legal Notes 7
Notes on System Security 9
Protective Measures 10
Notes on Cabling 10
Fire Protection 11
Lightning and Surge Protection 11
Drilling Template 13
Drilling Template c71 NurseAssist 14
Scope of Delivery 17
MOBOTIX c71 NurseAssist: Scope of Delivery 18
Mounting Supplies: Scope of Delivery 19
In-Ceiling Set: Scope of Delivery 20
Technical Specifications 21
Order Information 22
Hardware 22
Image and Video Properties 23
Kepler NurseAssist App - Specifications 23
General Software Features 26
Further Video Analysis 27
Video Management Software 27
Dimensions 28
In-Ceiling Set 29
Mounting 31
Adjusting the Camera Lens 32
Focusing the Camera Lens 32
Mounting Options 32
Mounting the Camera Without Accessories 33
Mounting with the In-Ceiling Set 34
Connecting the Camera 37
Connecting a USB-C Device 37
Connecting the Camera to the Network 38
Operating the Camera 41
Getting Started 42
Initial Camera Setup 42
Check the Preconditions 42
Access the Camera 43
Find the "Real" IP Address of the Camera 46
Network Settings on the Camera in MxMC 46

Camera Software in the Browser **49**
Access the Camera in the Web Browser 50
Basic Settings 50
Maintenance **53**
Replacing the microSD card 54
Cleaning the Camera 55
Cleaning and Disinfection Instructions 55
General Requirements 55
Cleaning Procedure 56
Post-Cleaning Requirements 56
Approved Cleaning Agents and Disinfectants 56
Incompatible Cleaning Agents 56

1

Before You Start

This section contains the following information:

Support **6**

MOBOTIX Support 6

MOBOTIX eCampus 6

MOBOTIX Community 6

Safety Notes **6**

Legal Notes **7**

Notes on System Security **9**

Protective Measures **10**

Notes on Cabling 10

Fire Protection 11

Lightning and Surge Protection 11

Support

MOBOTIX Support

If you need technical support, please contact your MOBOTIX dealer. If your dealer cannot resolve the issue, they will contact MOBOTIX Support on your behalf.

If you have internet access, visit the MOBOTIX Help Desk for additional information and software updates.

www.mobotix.com > Services > Help Desk.

MOBOTIX eCampus

The MOBOTIX eCampus is a comprehensive e-learning platform that lets you access training content whenever and wherever you want. Simply open the site in your browser and select the desired training course.

www.mobotix.com/ecampus-mobotix.

MOBOTIX Community

The MOBOTIX Community is another valuable source of information. MOBOTIX staff and other users share their knowledge and experience – and you can contribute too.

community.mobotix.com.

Safety Notes

- This product must be installed by qualified personnel, and the installation must comply with all applicable local regulations.
- Do not use this product in potentially explosive atmospheres.
- Install this product in a well-ventilated location and do not block any ventilation openings.
- Do not use this product in dusty environments.
- Prevent moisture or water from entering the housing.
- Install this product as described in this document. An incorrect installation can damage the product!
- Do not replace the device batteries. Replacing a battery with an incorrect type may cause an explosion.

- External power supplies must comply with the Limited Power Source (LPS) requirements and have the same power specifications as the camera.
- To comply with the requirements of EN 50130-4 for the power supply of alarm systems in 24/7 operation, the use of an uninterruptible power supply (UPS) is highly recommended to ensure reliable operation during power interruptions.

Legal Notes

Copyright Notice!

© 2023 MOBOTIX AG. All rights reserved.

This document and its contents are the property of MOBOTIX AG and are protected by applicable copyright laws. Any reproduction, distribution, modification, or use of this document, in whole or in part, without prior written permission of MOBOTIX AG is strictly prohibited.

All product names, trademarks, logos, and brands referenced in this document are the property of their respective owners. These may include, but are not limited to, trademarks and certification marks of third-party organizations. The use of such marks is for identification and informational purposes only and does not imply any affiliation with or endorsement by the respective trademark owners. MOBOTIX AG acknowledges the rights of all trademark holders and makes no claim to trademarks owned by third parties.

Legal Aspects of Video and Sound Recording

You must comply with all data protection regulations for video and sound monitoring when using MOBOTIX AG products. Depending on national laws and the installation location of the cameras, the recording of video and sound data may be subject to special documentation or it may be prohibited. All users of MOBOTIX products are therefore required to familiarize themselves with all applicable regulations and to comply with these laws. MOBOTIX AG is not liable for any illegal use of its products.

Declaration of Conformity

The products of MOBOTIX AG are certified according to the applicable regulations of the EC and other countries. You can find the declarations of conformity for the products of MOBOTIX AG on www.mobotix.com under **Services > Download Center > Marketing & Documentation > Certificates & Declarations of Conformity**.

RoHS Declaration

The products of MOBOTIX AG are in full compliance with European Unions Restrictions of the Use of Certain Hazardous Substances in Electrical and Electronic Equipment (RoHS Directive 2011/65/EU) as far as they are subject to these regulations (for the RoHS Declaration of MOBOTIX, please see www.mobotix.com, **Services > Download Center > Marketing & Documentation > Brochures & Guides > Certificates**).

Disposal

Electrical and electronic products contain many valuable materials. For this reason, we recommend that you dispose of MOBOTIX products at the end of their service life in accordance with all legal requirements and regulations (or deposit these products at a municipal collection center). MOBOTIX products must not be disposed of in household waste! If the product contains a battery, please dispose of the battery separately (the corresponding product manuals contain

specific directions if the product contains a battery).

Disclaimer

MOBOTIX AG does not assume any responsibility for damages, which are the result of improper use or failure to comply to the manuals or the applicable rules and regulations. Our General Terms and Conditions apply. You can download the current version of the **General Terms and Conditions** from our website at www.mobotix.com by clicking on the corresponding link at the bottom of every page.

Disclaimer under European law

This product has software for detecting certain human behavior. When used as intended in accordance with the relevant installation and usage instructions, the product can detect certain behaviors (in particular the position/change of location (a person is in bed/next to the bed)) and trigger an automatic alarm.

However, the product is not technically able to preventively detect, treat and/or prevent falls, accidents and any resulting injuries. The software used in the product is a non-autonomous aid with no diagnostic, preventive or therapeutic effect and no self-learning function. Supervision and monitoring of the persons captured by the camera remain entirely the responsibility of the user. Violations of the duty of supervision are at the user's own risk. The manufacturer of the product is not responsible or liable for this. The user is responsible for creating the technical system requirements necessary to operate the product and for the lawful use of the product. In particular, the user is obliged to comply with all applicable statutory provisions, including those governing the collection, processing and use of (personal) data. The manufacturer and the software supplier are not legally responsible for the information and use by the contractual partner and/or the user of the product.

All information on this product, its function and use is based on current (technical) knowledge. This information merely describes the properties of the product and is intended as a guide. A legally binding assurance of a certain quality or suitability for a certain purpose as well as other guarantees, warranties and / or assurances cannot be derived from this, unless expressly agreed otherwise. It is the sole responsibility of the contractual partner and / or the user to check whether the product is suitable for the specific purpose intended by the user. We recommend that the product be tested for its suitability for the intended purpose before use. Claims for damages caused by the use or non-use of the information in this document are generally excluded, unless there is a case of intentional or grossly negligent action by the manufacturer or any other case of mandatory statutory liability.

Disclaimer under US law

The Software embedded in the Product can perceive different elements of human behavior. If installed, maintained, serviced and used pursuant to the Product manual and manufacturer’s guidelines, the Software can recognize and analyze human behavior, in particular the location and movement of a person (e.g. if a person is lying in bed or next to the bed) and dispatch an automatic alert.

While the Product can increase patient safety and improve clinical outcomes, it cannot predict or avert falls, accidents and potential injuries resulting from falls or other accidents.

The Software [implemented in the Product] enables nurses or other caregivers to monitor a person but is not itself capable of autonomously monitoring and preventing falls and/or accidents and injuries nor can it diagnose or treat any medical conditions. While it empowers clinicians and care teams to remotely monitor and assess a person’s location, the clinicians and/or care teams and caregivers (the “User”) are solely responsible and liable for the monitored person and their well-being. WE THEREFORE EXPRESSLY DISCLAIM ANY LIABILITY ASSOCIATED WITH THE USE OF OR ACCESS TO OUR PRODUCT AND SOFTWARE.

The User of the Product and Software is responsible for ensuring that the hardware, software and services required to operate the Product and the Software meet the Products minimum requirements, including processing, speed, memory, client software and availability of dedicated Internet Access.

It is the User’s responsibility to comply with all applicable local, state, national and foreign laws, rules, treaties and regulations in connection with the use of the Software and Product, including those related to data privacy, the Health

Insurance Portability and Accountability Act of 1996 (HIPAA), international communications and the transmission of technical or personal data.

No information contained in the Product is medical advice and should not be construed as such. INFORMATION RECEIVED VIA THE PRODUCT, SOFTWARE, OR SERVICES SHOULD NOT BE RELIED UPON FOR PERSONAL, MEDICAL, LEGAL OR FINANCIAL DECISIONS AND YOU SHOULD CONSULT AN APPROPRIATE PROFESSIONAL FOR SPECIFIC ADVICE TAILORED TO YOUR SITUATION.

UNLESS OTHERWISE AGREED IN WRITING BY MOBOTIX, THE PRODUCT, INCLUDING ALL ASSOCIATED SERVICES AND SOFTWARE, ARE PROVIDED ON AN “AS IS” AND “AS AVAILABLE” BASIS WITHOUT ANY WARRANTIES OF ANY KIND. MOBOTIX, TO THE FULLEST EXTENT PERMITTED BY LAW, DISCLAIMS ALL WARRANTIES, EXPRESS OR IMPLIED, INCLUDING ANY WARRANTIES OF MERCHANTABILITY, FITNESS FOR A PARTICULAR PURPOSE OR USE, OR TITLE OR NONINFRINGEMENT. MOBOTIX MAKES NO WARRANTIES ABOUT THE ACCURACY, RELIABILITY, COMPLETENESS, OR TIMELINESS OF THE PRODUCT, INCLUDING ANY MATERIALS, SERVICES, SOFTWARE, TEXT, GRAPHICS, AND LINKS ASSOCIATED WITH OR INCLUDED IN THE PRODUCT, OR THAT THE PRODUCT (OR ANY PART THEREOF) WILL BE ERROR-FREE OR THAT DEFECTS WILL BE CORRECTED. IN ADDITION, MOBOTIX DOES NOT WARRANT THAT THE PRODUCT (OR ANY PART THEREOF) IS APPROPRIATE OR AVAILABLE FOR USE IN ANY PARTICULAR JURISDICTION.

TO THE MAXIMUM EXTENT PERMITTED BY APPLICABLE LAW, IN NO EVENT SHALL MOBOTIX AND ITS (SOFTWARE) SUPPLIERS BE LIABLE FOR ANY DIRECT, INDIRECT, PUNITIVE, INCIDENTAL, SPECIAL, CONSEQUENTIAL DAMAGES OR ANY DAMAGES WHATSOEVER INCLUDING, WITHOUT LIMITATION, DAMAGES FOR LOSS OF USE, DATA OR PROFITS, ARISING OUT OF OR IN ANY WAY CONNECTED WITH THE USE OR PERFORMANCE OF THE PRODUCT AND/OR SOFTWARE, WITH THE DELAY OR INABILITY TO USE THE PRODUCT AND/OR SOFTWARE, THE PROVISION OF OR FAILURE TO PROVIDE THE SOFTWARE, OR FOR ANY INFORMATION, SOFTWARE, PRODUCTS, SERVICES AND RELATED INFORMATION OBTAINED THROUGH THE PRODUCTS, OR OTHERWISE ARISING OUT OF THE USE OF THE PRODUCT AND/OR SOFTWARE, WHETHER BASED ON CONTRACT, TORT, NEGLIGENCE, STRICT LIABILITY OR OTHERWISE, EVEN IF MOBOTIX OR ANY OF ITS SUPPLIERS HAS BEEN ADVISED OF THE POSSIBILITY OF DAMAGES. BECAUSE SOME STATES/JURISDICTIONS DO NOT ALLOW THE EXCLUSION OR LIMITATION OF LIABILITY FOR CONSEQUENTIAL OR INCIDENTAL DAMAGES, THE ABOVE LIMITATION MAY NOT APPLY TO YOU.

FCC Disclaimer

This equipment has been tested and found to comply with the limits for a Class A digital device, pursuant to part 15 of the FCC Rules. These limits are designed to provide reasonable protection against harmful interference when the equipment is operated in a commercial environment. This equipment generates, uses, and can radiate radio frequency energy and, if not installed and used in accordance with the instruction manual, may cause harmful interference to radio communications. Operation of this equipment in a residential area is likely to cause harmful interference in which case the user will be required to correct the interference at his own expense.

Notes on System Security

The MOBOTIX c71 NurseAssist is designed and implemented in full accordance with the requirements of the Health Insurance Portability and Accountability Act (HIPAA), 45 CFR Parts 160 and 164. The system meets all administrative, physical, and technical safeguards mandated for processing, transmitting, and storing electronic Protected Health Information (ePHI).

For more details see: c71 NurseAssist NurseAssist Privacy Whitepaper.

To protect the camera against cybersecurity threats, the following security measures are enabled by default:

- Password must be changed when camera software is accessed for the first time.
- Public access is disabled.

- Intrusion detection is enabled.
- Timeout for grouping accesses from the same client into a single log entry is set to 60 minutes.
- IP addresses of offending HTTP clients are blocked.

The following measures are recommended after the installation has been completed:

Camera Web Interface

- **Admin Menu > Network Setup > Web Server**:
  - **Enable intrusion detection**: Enable notifications for repeated unsuccessful login attempts.
  - **Notification threshold**: Set the value as low as possible (for example, 5 minutes).

MxManagementCenter

- Menu View > Components View > Secure System:
  - **Enable encrypted HTTPS**: Disable all services that require unencrypted HTTP (for example, IP notify messages). Router settings may need to be adjusted when using remote access.
  - **User Management** (for all users):
    - **Force Complex Password**: Enabled
    - **Log out on Inactivity:** 5 minutes

For more information on this new feature, please read the «Cyber Protection Guide» on www.mobotix.com (under **Services > Download Center > Documentation > Brochures & Guides > Cyber Security**).

Protective Measures

WARNING!
When laying cables indoors and outdoors, the current regulations for cable laying, lightning and fire protection must always be observed.

MOBOTIX cameras and devices are protected against the effects of minor over voltages by a number of measures. However, these measures cannot prevent larger surge voltages from causing damage to the camera. When installing the cameras outdoors, special attention should therefore be paid to lightning protection and the associated dangers for the building and network infrastructure.

In general, you should only have MOBOTIX cameras and devices installed by certified specialist companies that are familiar with the installation and safe operation of network devices and the underlying regulations for lightning and fire protection as well as the current technology for preventing damage from surge voltages.

Notes on Cabling

- **Data cable:** Only double-shielded CAT5 cable or better (S/STP) may be used as data cable for the Ethernet interface.

- **Cable length:** The individual cable sections must not exceed the maximum permissible lengths in order to ensure perfect data transmission.
- **Avoidance of induction:** Data cables may only be laid parallel to power or high-voltage lines if the prescribed minimum distances are observed.

Fire Protection

When laying cables for the power supply, the relevant country-specific regulations (e.g. VDE in Germany) and the fire protection regulations valid at the installation site must be observed.

Lightning and Surge Protection

Measures should always be taken to protect this device from electrical surge damage.

NOTE!
Electrical surge protection available using the MX-Overvoltage-Protection-Box, which is available as an accessory.

Further information on how to avoid damage caused by lightning and over voltage is available from manufacturers of lightning and over voltage protection devices.

2

Drilling Template

Open this file in a PDF viewer (Adobe Reader or similar) and print the file **without scaling (original size)**.

NOTE!

Drilling template: **www.mobotix.com > Services > Download Center > Marketing & Documentation > Drilling Templates**.

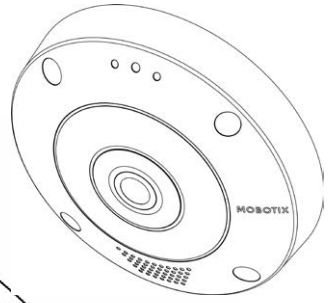

Oben
Top
En haut

ø 5.5 mm/0.22 in

30 mm/1.18 in

164.5 mm/6.48 in

100 mm/3.94 in

Ausschnitt für Kabel und Anschlüsse
Cutout for cables and connectors
Découpe pour les câbles et les connexions

Nur in Originalgröße kopieren oder ausdrucken!

Always copy or print at 100% of original size!

Copier ou imprimer uniquement aux dimensions d'origine !

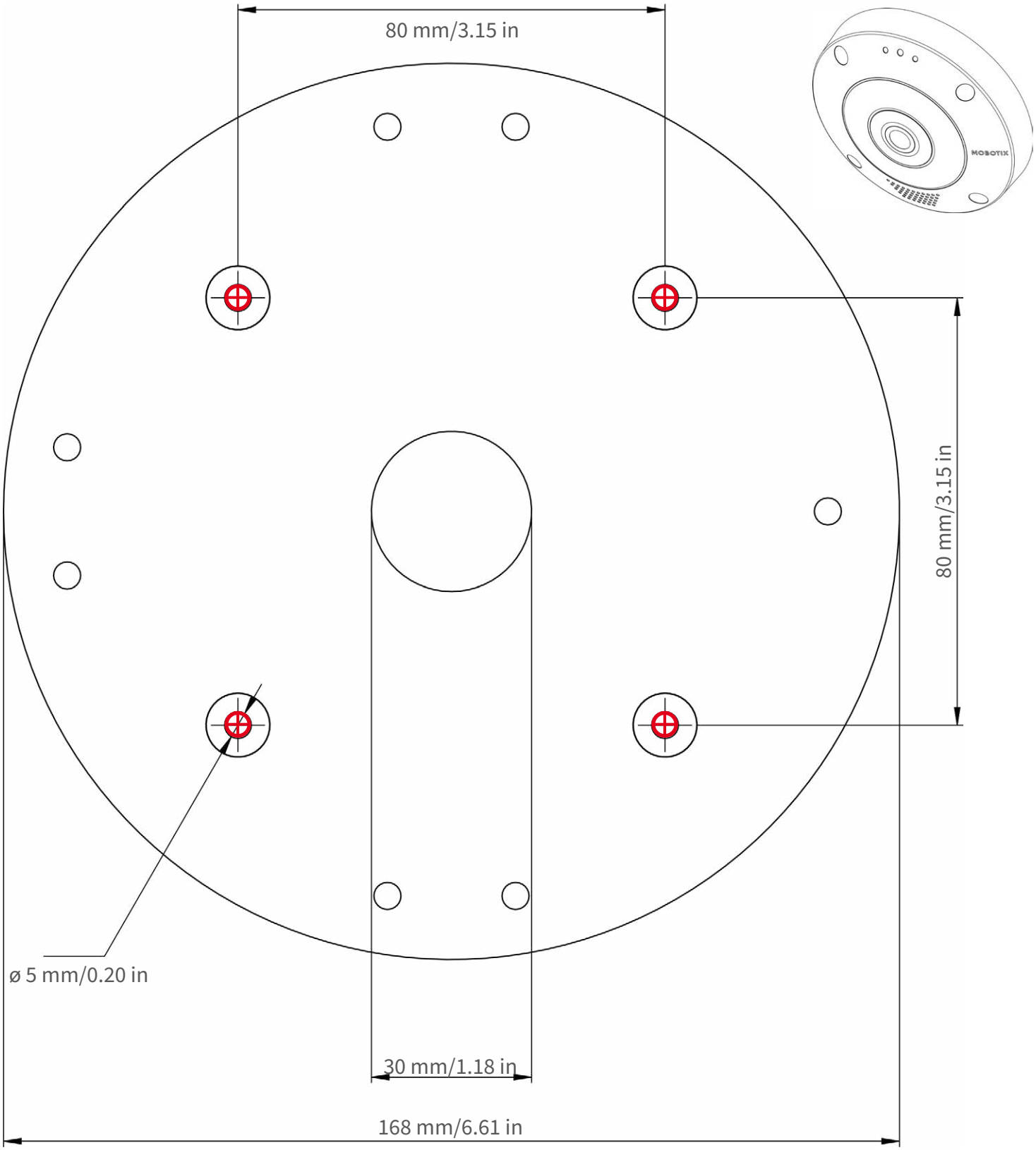

Nur in Originalgröße kopieren oder ausdrucken!

Always copy or print at 100% of original size!

Copier ou imprimer uniquement aux dimensions d'origine !

Bohrschablone / Drilling Template / Gabarit de perçage

Maßstab 1:1 / Scale 1:1 / Echelle 1:1

DE/EN/FR_09/2023

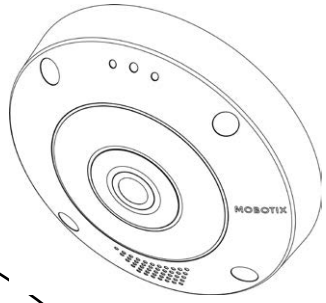

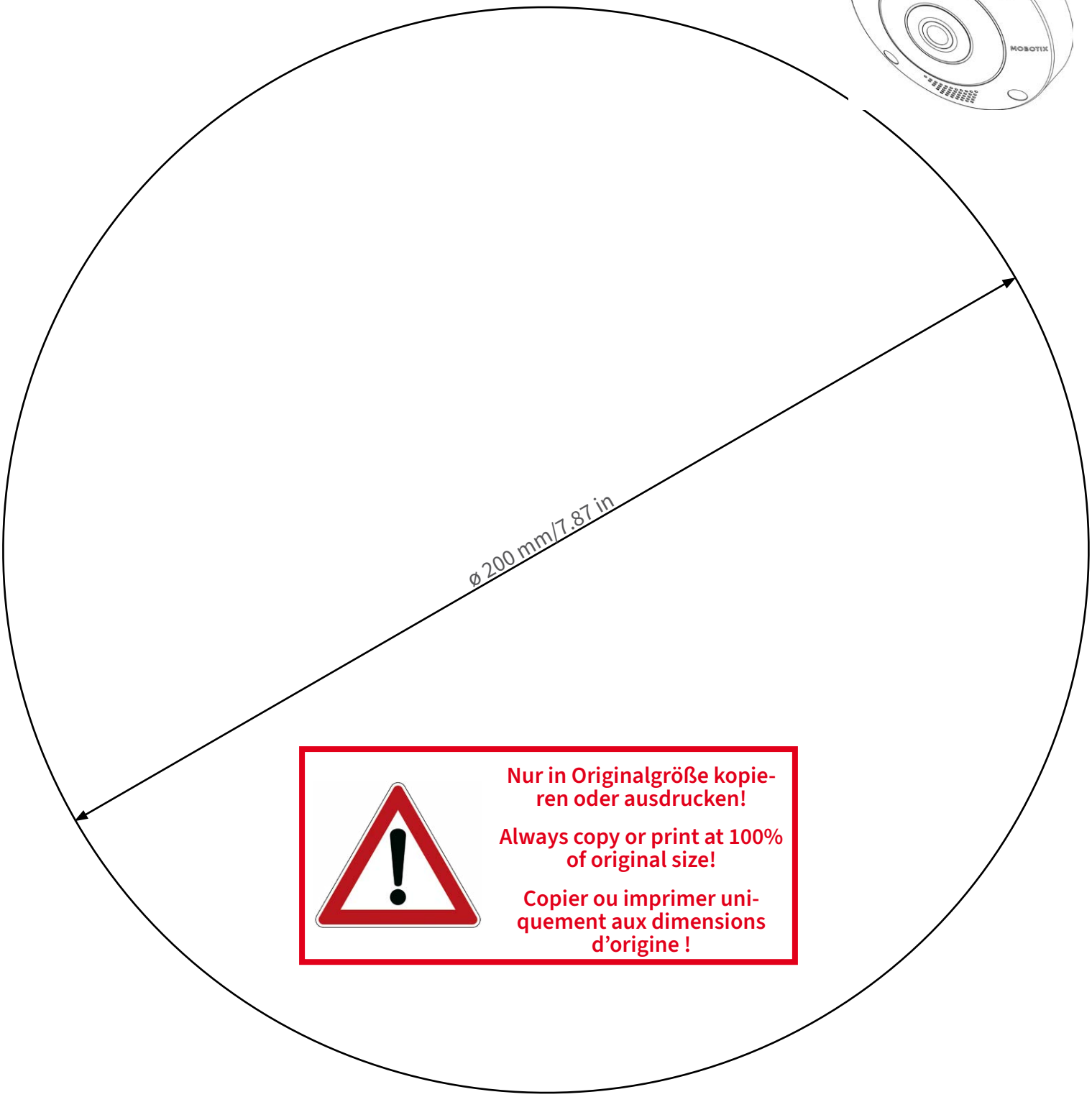

Nur in Originalgröße kopieren oder ausdrucken!

Always copy or print at 100% of original size!

Copier ou imprimer uniquement aux dimensions d'origine !

MOBOTIX AG • Kaiserstrasse • D-67722 Langmeil • Tel.: +49 6302 9816-0 • sales@mobotix.com • www.mobotix.com

MOBOTIX ist ein eingetragenes Warenzeichen der MOBOTIX AG in der Europäischen Union, den USA und in anderen Ländern. Änderungen vorbehalten. MOBOTIX übernimmt keine Haftung für technische Fehler, Druckfehler oder Auslassungen. Alle Rechte vorbehalten. • © MOBOTIX AG 2021
www.mobotix.com > Support > Download Center > Dokumentation > Zertifikate & Konformitätserklärungen

MOBOTIX is a trademark of MOBOTIX AG registered in the European Union, the U.S.A., and in other countries. Subject to change without notice. MOBOTIX do not assume any liability for technical or editorial errors or omissions contained herein. All rights reserved. • © MOBOTIX AG 2021
www.mobotix.com > Support > Download Center > Documentation > Certificates & Declarations of Conformity

MOBOTIX est une marque déposée de MOBOTIX AG en Union Européenne, aux États-Unis et dans d'autres pays. Susceptible de modification sans préavis. MOBOTIX ne se tient responsable d'aucune erreur technique ou de rédaction, ni d'omission dans le présent document. Tous droits réservés. • © MOBOTIX AG 2021
www.mobotix.com > Support > Centre de téléchargement > Documentation > Certificats & Déclarations de conformité

BeyondHumanVision

MOBOTIX

3

Scope of Delivery

This section contains the following information:

MOBOTIX c71 NurseAssist: Scope of Delivery **18**

Mounting Supplies: Scope of Delivery **19**

In-Ceiling Set: Scope of Delivery **20**

MOBOTIX c71 NurseAssist: Scope of Delivery

Scope of delivery MOBOTIX c71 NurseAssist Body

Item	Count	Description
1.2	1	USB plug, blue (installed)
1.3	1	Bayonet catch for USB port, blue (installed)
1.4	1	Ethernet plug, blue (installed)
1.5	1	Bayonet catch for Ethernet port, blue (installed)
1.6	1	Ethernet patch cable RJ45, 50 cm/19.7 in
1.7	1	SD card cover (installed)
1.8	1	SD card 8 GB (installed)
1.9	1	Mounting supplies (see Mounting Supplies: Scope of Delivery, p. 19)
1.10	1	Camera Connection Flyer
1.11	1	Important Safety Information

Mounting Supplies: Scope of Delivery

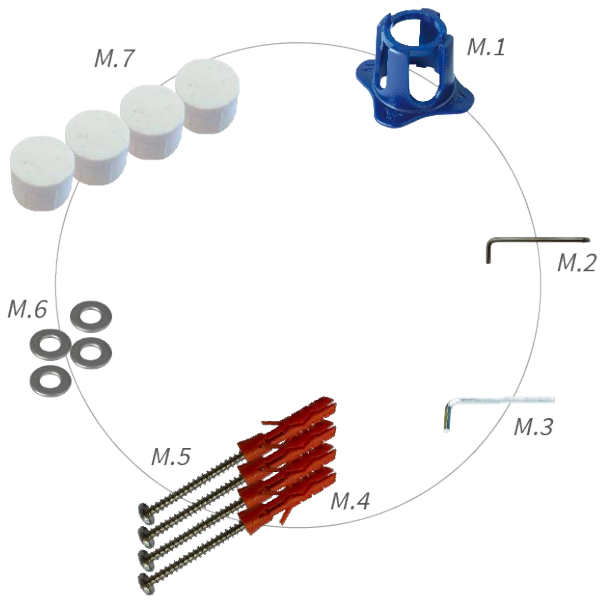

Scope of Delivery c71 NurseAssist Mounting Supplies

Item	Count	Description
M.1	1	c71 NurseAssist lens wrench, blue
M.2	1	Torx wrench 3.5 mm
M.3	1	Allen wrench 2.5 mm
M.4	4	Dowels 8 mm
M.5	4	Stainless steel pan head-screws 4.5x60 mm
M.6	4	Stainless steel washers Ø5.3 mm
M.7	4	Sealing plugs, white

In-Ceiling Set: Scope of Delivery

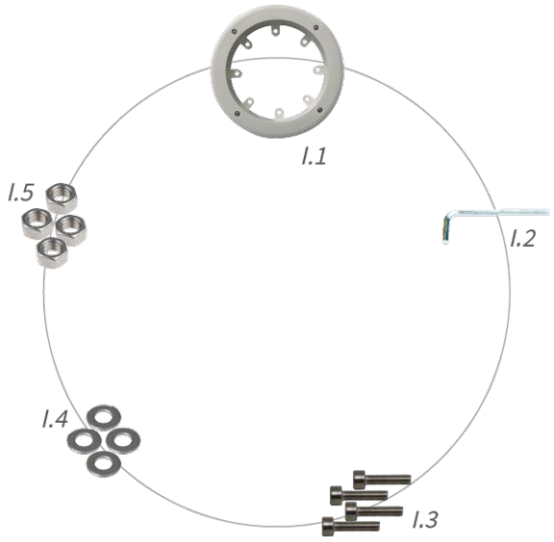

Scope of Delivery In-Ceiling Set

Item	Count	Description
I.1	1	In-Ceiling Set
I.2	1	Allen wrench 5 mm
I.3	4	Stainless steel Allen screws M6x30 mm
I.4	4	Stainless steel washers M6
I.5	4	Stainless steel hexagon nut M6

4

Technical Specifications

This section contains the following information:

Order Information 22

Hardware 22

Image and Video Properties 23

Kepler NurseAssist App - Specifications 23

General Software Features 26

Further Video Analysis 27

Video Management Software 27

Order Information

Name	MOBOTIX c71 NurseAssist *powered by Kepler Vision Technologies*
Order Code:	Mx-c71B-NurseAssist

Hardware

Image sensor (DN)	4K (1:1) effective max. resolution 2144x2144
Light sensitivity	▪ Color sensor (day): 0,1 lx @ 1/60 s; 0,005 lx @ 1 s ▪ BW sensor (night): 0,02 lx @ 1/60 s; 0,001 lx @ 1 s
Exposure control	Manual and automatic mode 1 s to 1/16,000 s
IK protection class	N/A for the housing except the lens
Operating temperature range	-10 to 50 °C/-14 to 122 °F
Internal DVR Storage	Internal microSD card (SDHC/SDXC), 8 GB out of the box, max. 1 TB.
Microphone/Speaker	Integrated Microphone: ▪ Sensitivity: -35 dB +/-4 dB (0 dB = 1 V/pa, 1 kHz) Integrated Loudspeaker: ▪ 0.9 W at 8 Ohm
Integrated illumination	850 nm IR, up to 25 m^2 Also see the Kepler NurseAssist App requirements: https://www.-mobotix.com/de/media/5963
Tampering Detection	Integrated Shock Sensor
Max. power consumption	▪ Max. 25 W/1042 mA at 24 VDC
Average power consumption	14.5-16 W incl. IR, WDR and App
Electrical surge protection	Available with MX-Overvoltage-Protection-Box (not part of the scope of deliv-ery)
PoE standard	PoE Plus (802.3at-2009)/Class 4 (Class 3 can be enabled via HW switch. **Note:** IR illumination requires Class 4)
Interfaces	▪ Ethernet 1000BaseT (RJ45 according to EIA/TIA-568B) ▪ USB-C/USB2.0; High-Speed (V_{out} = 5.1 V, I_{out} = 0.9 A, P_{out} = 4.5 W)
Status LED	multicolor (red, blue, green)
Mounting Options	Ceiling mountable
Dimensions (Ø x height)	164 x 47.5 mm

Weight	Gross weight: 1.040 g Net weight: 765g
Housing	Aluminum, PBT-30GF
Standard accessories	
MTBF	80,000 hours
Certificates	EN 50121-4, EN 55032, EN 55035, EN 61000-6-1, EN 61000-6-2, EN 61000-6-3, EN 61000-6-4, EN 62368-1, EN 63000, AS/NZS CISPR32, 47 CFR Part 15b, NRTL
Protocols	DHCP (client and server), DNS, ICMP, IGMP v3, IPv4, IPv6, HTTP, HTTPS, FTP, FTPS, MQTT, NFS, NTP (client and server), RTP, RTCP, RTSP, SFTP, SIP (client and server), SMB/CIFS, SNMP, SMTP, SSL/TLS 1.3, TCP, UDP, VLAN, VPN, Zero-conf/mDNS
Manufacturer warranty	5 years

Image and Video Properties

Available video codecs	▪ H.264, H.265 ▪ MxPEG+ ▪ MJPEG
Image resolutions	VGA 640x360, XGA 1024x576, HD 1280x720, FHD 1920x1080, 4MP 2688x1512, 4K 1:1 2144x2144
Multi streaming	H.264, H.265 with triple streaming
Multicast stream via RTSP	Yes
Max. image resolution	4K (1:1) effective max. resolution 2144x2144 hemispheric image
Max. frame rate (fps)	MxPEG: 20@4K, H.264: 30@4K, H.265: 30@4K

Kepler NurseAssist App - Specifications

General App Information

Product Name	Kepler NurseAssist App
Order Code (only available in a bundle with the MOBOTIX cameras M ONE (FIX & VARIO) and c71 NurseAssist)	Extended App license: Mx-APP-KEP-NUA-EXT
Supported MOBOTIX Cameras	M ONE (FIX & VARIO) (basic version pre-installed) MOBOTIX c71 NurseAssist (basic version pre-installed)
Minimum Camera Firmware	v7.3.6.x
MxManagementCenter compatibility	▪ min. MxMC v2.9.x ▪ Event Search: Smart Data Interface license included

App Features

App Features Basic Version	■ monitoring of the well-being of patients in private rooms, corridors and common areas of Healthcare facilities. ■ minimization of reaction times due to decentralized state-of-the-art fall detection. ■ prevention of accidents through person down, person in bed and person out of bed event. ■ automatized detection and localization of the bed in the patient's room. ■ GDPR compliant operation through event-controlled obscuring of live and recorded images. ■ Dynamic masking of a person in bed as additional privacy protection measure.
App Features Extended Version	Plug-In license required to extend the NurseAssist status and alarm notifications with the following functions: ■ Person sits on the edge of the bed ■ Person has left the room ■ Person has entered the room ■ Person has entered the bathroom / is in the bathroom ■ Bed is not recognized / is not present **NOTE!** The Plug-In license requires MOBOTIX NurseAssist Smart Sensor or licensed Kepler NurseAssist Certified App.
Additional features of the NurseAssist Smart Sensor	■ * IP-based bidirectional communication via integrated microphone and speaker ■ * Noise level analysis enables the detection of loud ambient noise (e.g., loud shouting). ■ Integrated shock detector for detecting physical tampering or vibrations ■ Additional device health monitoring functions, including connectivity and uptime monitoring ■ Configurable system status display via sensor status LED ■ REST API interface enables deep integration and remote control of all sensor functions **NOTE!** *The sensor's audio functions are disabled by default. If required, they can be enabled by an authorized administrator.
Meta Data / Statistic format	JSON
Supported Reporting Interfaces	JSON / XML via HTTP(S), MQTT, MxMessageSystem
Integrated Nurse Call Systems	Verified integrations documented in MOBOTIX Community (see https://community.mobotix.com/c/certified-apps/kepler-nurseassist/176)
Trial license	30-day trial license pre-installed

MxMessageSystem supported	Yes
MOBOTIX Events	Yes
ONVIF Events	Yes (Generic Message event)

Scene Requirements

Room size	max. 25m^2 assuming an almost square room (e.g. 5x5 m) by radius of 4 m - long and narrow rooms will not work.
Required installation position (camera)	ceiling-mounted
Recommended installation height (camera)	2.0m - 3.5m
Mounting distance from bed	0.5m - 3.0m
Mounting distance from wall	> 70cm

Technical App Specifications

Synchronous / Asynchronous App	asynchronous
Simultaneous execution of other apps	No
Accuracy	min. 99% (considering scene requirement and no view blocking objects)

General Software Features

Feature	Properties
WDR	Up to 120 dB
Software features	■ H.264, H.265 Multistreaming ■ Multicast stream via RTSP ■ Digital pan, tilt, zoom/vPTZ (up to 8x zoom) ■ Genetec protocol integration ■ Programmable exposure zones ■ Snapshot recording (pre/post-alarm images) ■ Continuous recording ■ Event recording ■ Time-controlled flexible event logic ■ Weekly schedules for recordings and actions ■ Event video and image transfer via FTP and email ■ Playback and QuadView via web browser ■ Animated logos on the image ■ Master/Slave functionality ■ Privacy zone scheduling ■ Remote alarm notification (network message) ■ Programming interface (HTTP API) ■ MxMessageSystem
Master/Slave functionality	Yes
Remote alarm notification	Email, network message (HTTP/HTTPS), SNMP, MxMessageSystem, MQTT
DVR/image storage management	■ On internal microSD card ■ On external USB and NAS devices ■ Different streams for live image and recording ■ MxPEG+ only ■ MxFFS with buffered archive, pre- and post-alarm images, storage monitoring with error reporting
Camera and data security	User and group management, SSL connections, IP-based access control, IEEE 802.1X, intrusion detection, digital image signature
Firmware Tampering Detection	Digital Signature

Further Video Analysis

Feature	Properties
Video motion detection	Yes
MxActivitySensor	Version 1.0, 2.1, 3.0
MxAnalytics	Yes
MOBOTIX App support	Yes

Video Management Software

Feature	Properties
3rd Party Nurse Call Systems	Extensively integrated; documented integrations available at: **community.mobotix.com > MOBOTIX 7 Certified Apps > Kepler NurseAssist**
MOBOTIX HUB	Yes, compatible with MOBOTIX HUB NurseAssist Dashboard **www.mobotix.com > Services > Download Center > Software Downloads**
MxManagementCenter	Yes (latest version recommended) **www.mobotix.com > Services > Download Center > Software Downloads**
MOBOTIX LIVE App	Yes, available in Google Play Store (Android) and Apple App Store (iOS).
3rd Party VMS Software	See ONVIF Profile S/G/T specification

Dimensions

NOTE!

Drilling template: **www.mobotix.com > Services > Download Center > Marketing & Documentation > Drilling Templates**.

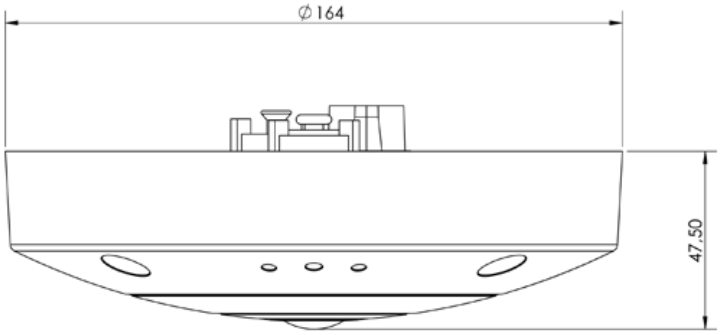

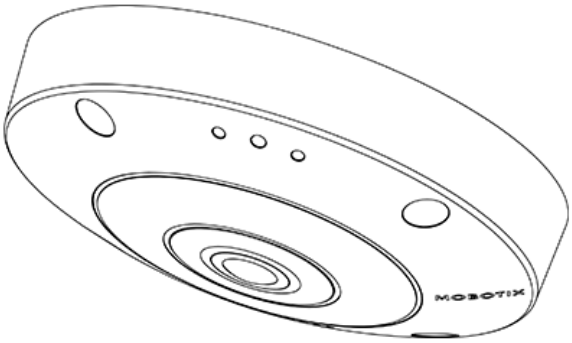

In-Ceiling Set

Top

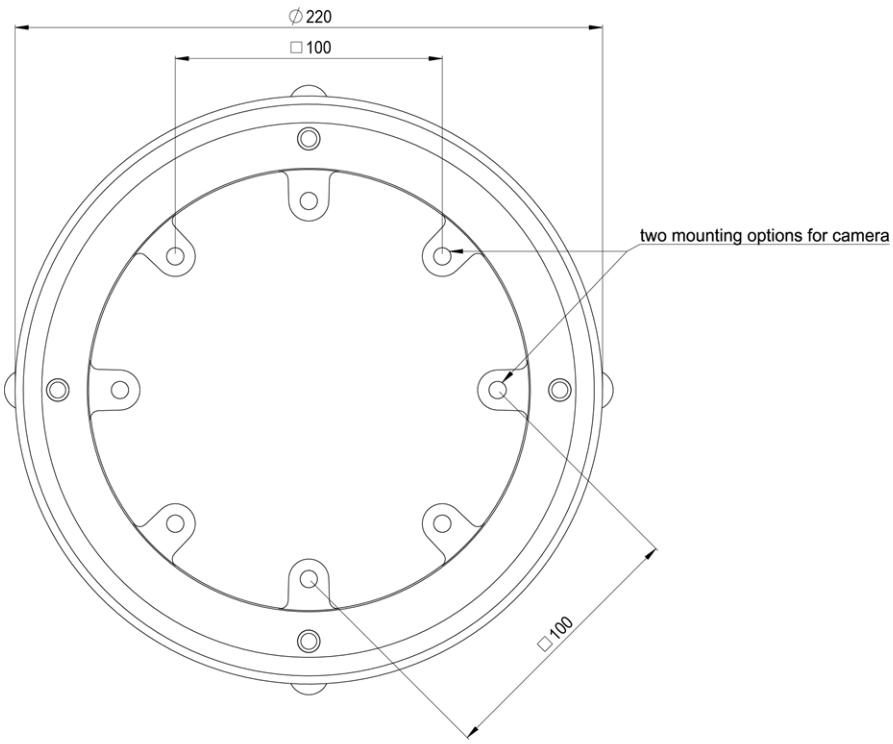

Side

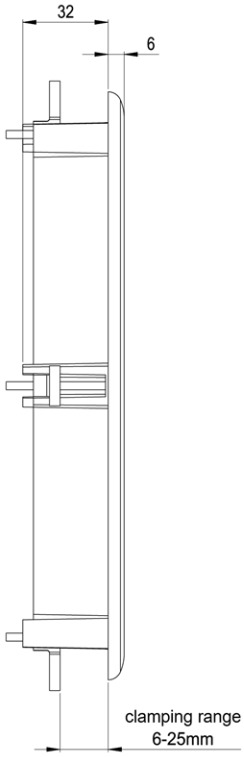

Isometric view

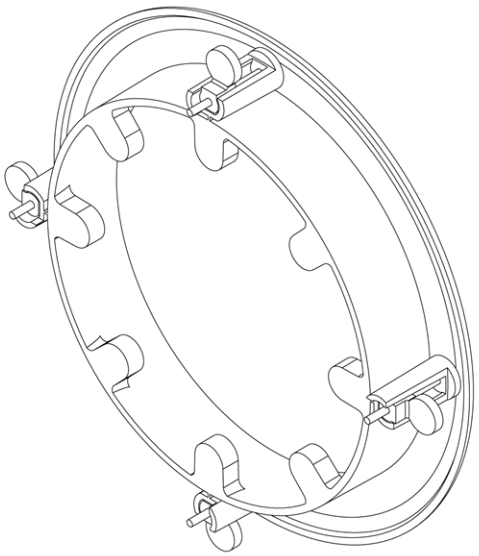

Back

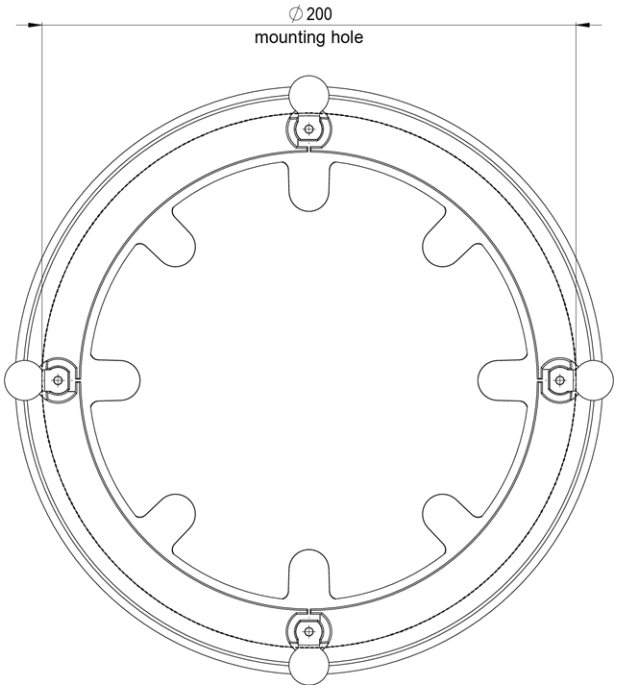

6

Mounting

This section contains the following information:

Adjusting the Camera Lens **32**

Focusing the Camera Lens 32

Mounting Options **32**

Mounting the Camera Without Accessories 33

Mounting with the In-Ceiling Set 34

Connecting the Camera **37**

Connecting a USB-C Device 37

Connecting the Camera to the Network 38

Adjusting the Camera Lens

NOTE!
The camera lens is pre-focused at the factory, so this step is usually not necessary.

Adjusting the camera at the mounting position will ensure that you will see the desired field of view later on.

CAUTION!
When adjusting the image focus or the field of view of the camera, always make sure that you can see the live image of the camera on your monitor. See Camera Software in the Browser, p. 49.

Focusing the Camera Lens

1. Focus the lens ① by turning the lens with the lens wrench M.1, p. 19.

2. If required, clean the optical surfaces using a clean, lint-free cotton cloth.

Mounting Options

You can mount the MOBOTIX c71 NurseAssist to any even surfaces.

CAUTION!
The MOBOTIX c71 NurseAssist camera must be mounted on the ceiling. Only in this way is reliable observation of the nursing beds possible.

Accessories for Mounting

- With the In-Ceiling Set, you can discreetly install the MOBOTIX c71 NurseAssist Camera in the ceiling with the connections and most components hidden inside the ceiling.

All mounting options provide concealed cabling, thus improving installation security.

CAUTION!

- Install only on a flat surface! Unevenness must not exceed 0.5 mm/0.02 in!
- Only use genuine MOBOTIX patch cables to guarantee the weatherproofness!

NOTE!

- Before mounting the camera, determine its ideal position and make sure that the field of view is not obstructed in any way. Once the camera has been mounted, you can fine-tune the image.
- If the monitored area changes or the camera has to be installed in a different location, you can simply exchange the lenses.

Mounting the Camera Without Accessories

The MOBOTIX c71 NurseAssist can be easily installed directly on ceilings. For installation without any accessories, you should first install a flush-mounted wall outlet, since the connectors on the rear of the camera need some space.

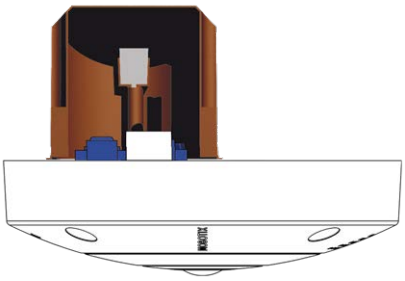

Before mounting the camera, make sure that a network connection with power supply according to the PoE Plus (802.3at-2009) standard is available at the mounting position (see Connecting the Camera to the Network, p. 38).

NOTE!
Do not use the dowels if the installation surface is wood. Only use the screws to fasten the mounting plate directly on the surface. In order to facilitate screwing in wood, the positions should first be pre-drilled using a 2 mm drill bit, for example (drilling depth just slightly less than screw length).

NOTE!
To guarantee maximum coverage of the room by the camera, the MOBOTIX c71 NurseAssist should be positioned on the wall or ceiling as close to the middle of the room as possible.

Step by Step

1. Mark the holes ① for drilling using the drilling template (see Drilling Template, p. 13). When drilling, use a suitable 8 mm drill bit and drill holes at least 60 mm/1.2 deep.

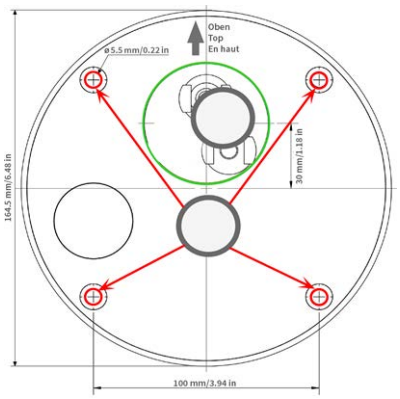

> **NOTE!**
> The drilling template also includes a circle ② marking the minimum size and position of the wall outlet, in addition to the drilling holes.

2. Fully push the dowels M.4, p. 19 into the holes you drilled.
3. Establish the PoE network connection to the camera (see Connecting the Camera to the Network, p. 38).
4. Mount the camera using the supplied pan head screws M.5, p. 19.

Mounting with the In-Ceiling Set

CAUTION!
Before mounting the camera, make sure that a network connection with power supply according to the PoE Plus (802.3at-2009) standard is available at the mounting position (see Connecting the Camera to the Network, p. 38).

With the In-Ceiling Set, you can discreetly install the MOBOTIX c71 NurseAssist Camera in the ceiling with the connections and most components hidden inside the ceiling. The In-Ceiling Set is particularly suitable if the c71 NurseAssist is to be installed in suspended ceilings of indoor spaces with customer or public traffic (e.g. hotels, restaurants, banks, retail stores, public buildings, etc.).

NOTE!

Drilling template: **www.mobotix.com > Services > Download Center > Marketing & Documentation > Drilling Templates**.

Step by Step

1. Cut a round hole with a diameter of 200 mm into the ceiling (see Drilling Template, p. 13).

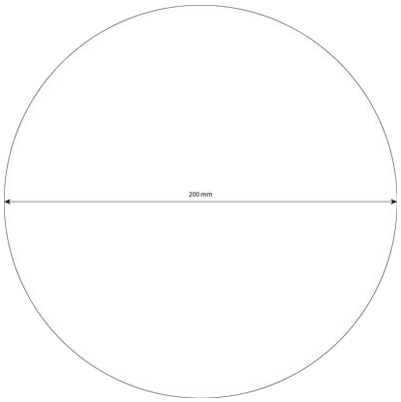

2. Run the network cable above the suspended ceiling and ensure that enough cable slack is available.
3. Remove the rubber plugs from the front of the camera.

4. Connect the on-site network cable with the camera patch cable using a standard connector. Excess cable can be stored easily within the In-Ceiling Set (see Connecting the Camera, p. 37).

5. Place the In-Ceiling Set in the ceiling opening and tighten the dovetail guides clockwise using a Phillips screwdriver.

6. Push the rubber plugs M.7, p. 19 into the screw holes of the camera.

7. Connect the camera to the PoE network connection of the building (see Connecting the Camera to the Network, p. 38).

Connecting the Camera

All connections to the camera (network, MiniUSB, inputs/outputs) can be made directly on the camera. No further accessories are required for this. A PoE switch provides the camera's power supply.

Connecting a USB-C Device

The camera has a USB-C port that allows connecting external storage media or extension boxes, for example.

1. To uncover the USB-C port, remove the bayonet catch by rotating it counter-clockwise, then remove the blue rubber plug.

2. Plug the USB-C connector into the port and press in firmly until the blue sealing ring clicks into place.

3. Attach the bayonet catch and turn it clockwise until it clicks in the locked position.
4. Connect the USB-C device to the other end of the USB cable.

Connecting the Camera to the Network

CAUTION!

- The PoE switch must provide Class 4 according to PoE Plus (802.3at-2009) as well as the 100/1000 Mbps Ethernet interface of the camera.
- It is highly recommended to use an uninterruptible power supply (UPS) for the switch.
- The maximum length of the network cable for remotely supplying power is 100 m (300 ft).

Connecting the camera to the network

1. To uncover the RJ45 network connector, remove the bayonet catch ① by rotating it counter-clockwise and pull it off with the blue rubber plug.

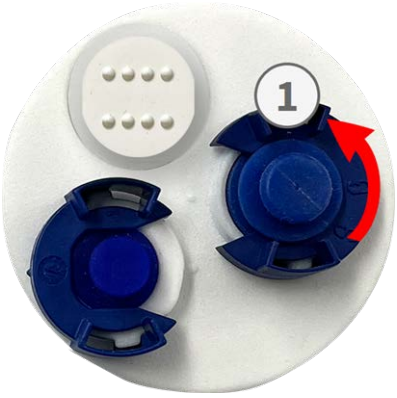

2. Plug the supplied patch cable ② into the network connector and press the plug in firmly until the blue sealing ring clicks into place.

3. Attach the bayonet catch ③ by rotating it clockwise.

4. Connect the supplied patch cable 1.6, p. 18 with the PoE network connection of the building using a standard connector.

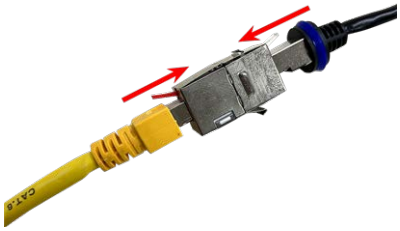

7

Operating the Camera

This section contains the following information:

Getting Started **42**

Initial Camera Setup **42**

Check the Preconditions 42

Access the Camera 43

Find the "Real" IP Address of the Camera 46

Network Settings on the Camera in MxMC 46

Getting Started

You can use the MOBOTIX c71 NurseAssist with any current browser – or with MxManagementCenter.

You can download MxManagementCenter free-of-charge from **www.mobotix.com > Services > Download Center > Software Downloads**.

1. **Connect the camera to the network.** The network cable will also provide power to the camera.
2. **Establish a connection to the camera and adjust the network settings if required:** By factory default, MOBOTIX cameras are booting as DHCP client with an additional fixed IP address in the 10.x.x.x range (e.g., 10.16.0.128). Local computer networks usually have IP addresses in the 172 or 192 ranges. Depending on whether a DHCP server is present on the local network or if the network has been set up to use fixed IP addresses, there are several possibilities for establishing a connection to the camera and to change its network settings as described in Initial Camera Setup, p. 42.
3. **Configure camera:** You can use the user interface of the camera in a browser or in MxManagementCenter.

Initial Camera Setup

Check the Preconditions

- Is the camera running (check camera power LED)?
- Is the camera accessible using my current network connection?
- Do I have the necessary information for successfully running the camera on the network?
  - IP address of NTP (*Network Time Protocol*) server.
  - IP address of network gateway (if required).

Access the Camera

1. Start your web browser.
2. Access the camera using its zeroconf address:
   - Look for the factory IP address such as `10.x.y.z` on the sticker on the camera body or the packaging.
   - Enter this address in the address bar of your browser using the following syntax: `mx10-x-y-z.local`.

     EXAMPLE:
     Taking a factory IP address of `10.32.24.129` as an example, you would enter `mx10-32-24-129.local` in the address bar of your browser.

   - Click on **Admin Menu** and enter the default access credentials (`admin/meinsm`).
3. In the **Quick Installation** dialog, select your language, then click on >.

4. Continue clicking on > and do not change any settings until you reach the **Security** dialog.

   Set a password for the admin user of the camera. Make sure you keep the password in a safe place.

NOTE!
Make sure to record the new password in the system documentation!

5. Continue clicking on > and do not change any settings until you reach the **Country Settings** dialog.

   Check the time zone and adjust it, if necessary.

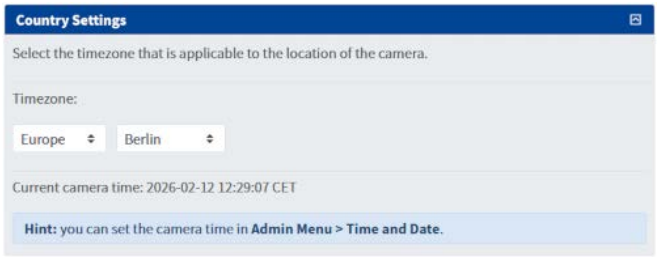

6. Click on > and in the **Audio Settings** dialog, activate the devices that are available for this camera.

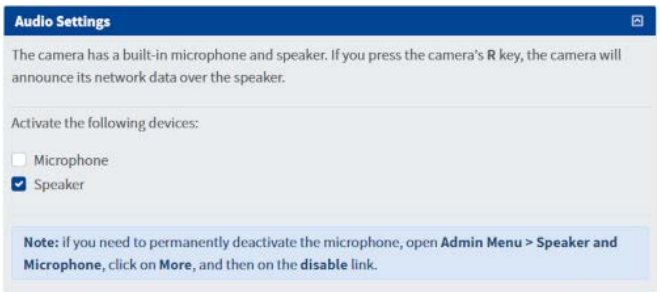

7. Click on > and in the **Camera Name** dialog, enter a descriptive camera name.

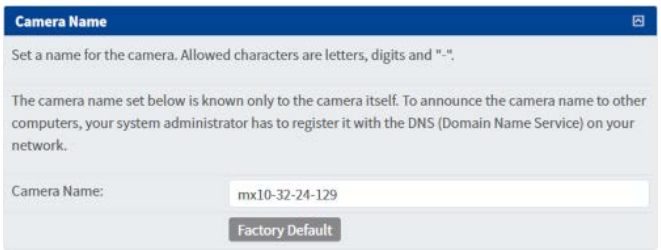

> **NOTE!**
> Make sure to record this camera name in the system documentation!

8. Continue clicking on > and do not change any settings until you reach the **Time Server** dialog.

   Enter the IP address of your network time servers as provided by your network administrator (e.g. `192.168.1.1 ptbtime1.ptb.de`; use spaces to separate multiple addresses).

   If the time server is working properly, the LED to the right of the field turns green. A red LED indicates that the server does not work properly.

9. Click on > and review the information in the **Store Configuration** dialog. If everything is correct, print the page and include it in the system documentation.

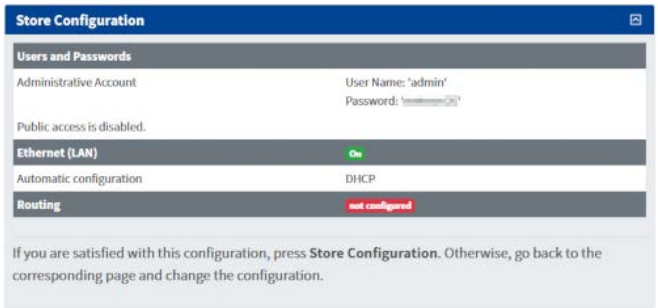

10. Click on **Store Configuration** and then on **Reboot**.

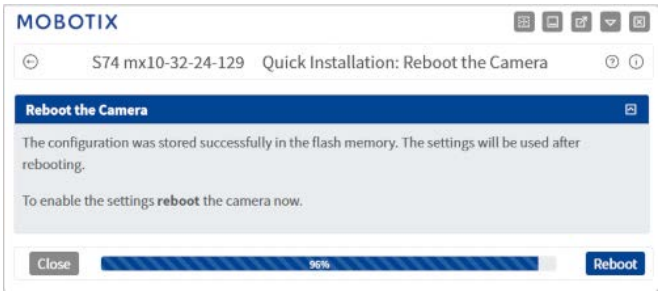

11. Enter the new password you entered in the **Security** dialog when prompted by the camera.

    The camera will now reboot; once it is working again, you will see its live image.

Find the "Real" IP Address of the Camera

Since you are still using the `mx10-32-24-129.local` zeroconf address, you need to find out the actual IP address of the camera.

1. Click on the **Show Camera Status** icon ⓘ.
2. In the **Camera Status** dialog, click on **Networking**.
   - The **Camera Name** entry shows the camera's current fully qualified domain name.
   - The **BOOTP/DHCP** status *Client running, got a lease* shows that the camera properly received an IP address.
   - The **IP Address** entry shows the camera's current address.
3. You can use either the **Camera Name** (e.g. `mx10-32-24-129.fritz.box`) or the IP address (e.g. `192.168.1.210`) to access the camera from now on.
4. Open a new browser tab and enter the address (e.g. `mx10-32-24-129.fritz.box` or `192.168.1.210`), then enter the access credentials (`admin/<your new password>`).

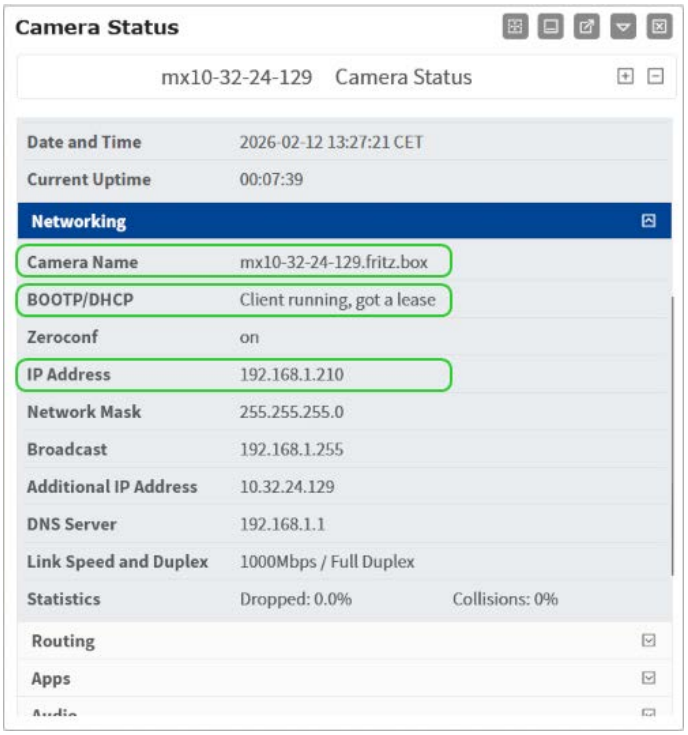

> **NOTE!**
> Make sure to record this address in the system documentation together with the camera name!

Network Settings on the Camera in MxMC

MxManagementCenter is a video management software for setting up and using the entire video surveillance system that provides a range of functions for different tasks and user groups. You can download the newest release of MxManagementCenter from the MOBOTIX website (www.mobotix.com > Services > Download Center > Software Downloads, MxManagementCenter section).

When starting MxManagementCenter for the first time, the configuration wizard opens and automatically starts searching for MOBOTIX cameras. The number of found cameras is shown as a counter next to the **Add Devices** icon. This number is updated automatically if the number of MOBOTIX cameras on the network has changed (i.e., by connecting new/disconnecting existing cameras).

1. Click on **Add Devices**. The cameras are displayed either in a list or as tiles. Use the List and Tile buttons to change the display mode.

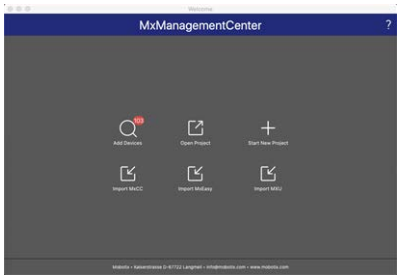

The application automatically monitors and displays the operating status of all cameras using corresponding icons.

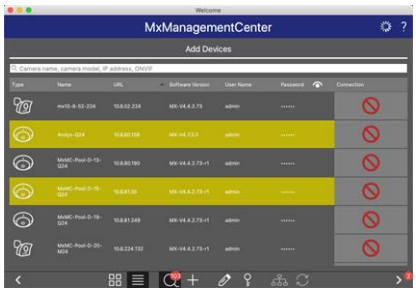

EXAMPLE:

- The camera is not in the same subnet as the computer.
- The user name and password of the camera are not known.

NOTE!
Using the Bonjour service (en.wikipedia.org/wiki/Bonjour_(software)), the application finds not only MOBOTIX cameras on the same subnet, but also in other subnets. Normally, you would not be able to establish any connection to cameras in a different network or subnet.

NOTE!
This is the case, for example, if you are integrating cameras into a network without DHCP server (i.e. with fixed IP addresses) and the IP address range is different from the 10.x.x.x range supported by the cameras in addition to DHCP.
MxManagementCenter can automatically configure such a camera so that it is "integrated" into your existing network.

2. Select the camera you want to set up and click on **Edit Network Settings** at the bottom of the program window. The **Change Network Settings for Selected Devices** dialog opens.
3. Enter the IP address and the subnet mask of the selected camera.

NOTE!
The IP addresses of the other cameras are automatically incremented by 1.

4. Click on **Apply** to apply the settings.

> **NOTE!**
> For more information on this feature, please read the MxManagementCenter online help or the Tutorial (see www.mobotix.com > Services > Download Center > Documentation > Brochures & Guides > Tutorials).

8

Camera Software in the Browser

This section contains the following information:

Access the Camera in the Web Browser **50**

Basic Settings **50**

Access the Camera in the Web Browser

Once the power and network connection of the MOBOTIX have been established, you can access the interface of the camera software in a web browser.

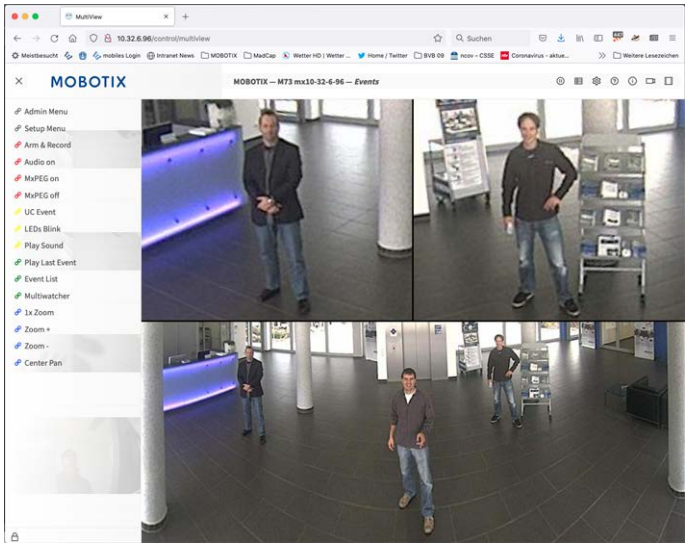

- Enter the camera's IP address in the address field of a web browser.

NOTE!
You can find the IP address of the camera, for example, in the camera housing or on the sticker on the packaging.

Basic Settings

NOTE!
You must change the password when logging in for the first time.

CAUTION!
Make sure that you store information on user names and passwords in a secure place.

If you loose the administrator password and cannot access the Administration menu, the password can only be reset at the factory. This service is subject to a service charge.

The Quick Installation Wizard will appear automatically when accessing the Administration Menu for the first time. It provides an easy method to adjust the basic camera settings to the current application scenario. For security reasons, it is highly recommended to change the default administrator password after the camera has been configured properly.

Administering the camera: You can modify the camera configuration in the Administration Menu or the Setup Menu:

- **Admin Menu:** This menu contains the basic configuration dialogs of the camera (e.g. passwords, interfaces, software update).

- **Setup Menu:** This menu contains the dialogs for configuring the image, event and recording parameters. Some of these settings can be changed using the corresponding Quick Controls in the Live screen.

NOTE!
The camera is preconfigured and basicly ready to use. For further settings see the Kepler NurseAssist App Guideline which is available in section MOBOTIX Certified Apps on the MOBOTIX webpage: **www.mobotix.com > Services > Download Center > Marketing & Documentation > User Manuals**

NOTE!
For more information, consult the Reference Manual of the camera (see **www.mobotix.com > Services > Download Center > Marketing & Documentation > User Manuals**.

9

Maintenance

This section contains the following information:

Replacing the microSD card **54**

Cleaning the Camera **55**

Cleaning and Disinfection Instructions 55

Approved Cleaning Agents and Disinfectants 56

Incompatible Cleaning Agents 56

Replacing the microSD card

CAUTION! Risk of equipment damage and data loss!

- Before removing the microSD card, disable recording and reboot the camera.
- Disconnect the camera from the power supply.
- Do not touch the circuit board while replacing the microSD card.
- Ensure that the microSD card is not write-protected.

1. **Deactivate storage:** If storage on microSD card is still activated, deactivate it in the cameras web interface: **Admin Menu > Storage on External File Server / Flash Device**, then reboot the camera.
2. Disconnect the camera's power supply.
3. **Open the screw cap:** Using a coin or wide screwdriver, turn the screw cap ① on the back of the camera to the left and remove it.

4. Disconnect the camera's power supply.
5. **Unlock the microSD card holder:** Flip up the metal cover ② of microSD card (e.g. with a fingernail).
6. **Remove the microSD card**
7. **Insert microSD card:** Insert the new microSD card in the holder and close the metal cover with light pressure until it snaps in.
8. **Close the screw cap:** Reinsert the screw cap and turn it to the right using a wide screwdriver.

9. **Activate storage:**
   - Format a new microSD card as outlined in the camera's *Storage on External File Server / Flash Device* online help topic.
   - If the microSD card already is formatted with MxFFS, you can activate storage in **Admin Menu > Storage on External File Server / Flash Device**. After rebooting the camera, recording will automatically resume.
10. **Reboot the camera.**

Cleaning the Camera

To ensure safe and effective cleaning and disinfection of the smart sensor c71 NurseAssist in care environments, it is important to consider both the integrity of the equipment and the health and safety of patients and staff. Given the variety of materials used in these devices and the need to ensure effective disinfection to prevent the spread of infection, this document is intended as a guide to help to select the appropriate cleaning agents and procedures for your c71 NurseAssist devices, considering both material compatibility and hygiene requirements in care environments.

Cleaning and Disinfection Instructions

This section describes the proper procedure for cleaning and disinfecting the surfaces of the c71 NurseAssist surveillance camera in order to ensure long-term functionality and prevent damage to sensitive components.

NOTE!
Perform cleaning and disinfection only by qualified personnel in accordance with this documentation.

General Requirements

Use only **soft microfiber cloths** for cleaning.

Do not use abrasive or rough cloths that may scratch or damage the surface.

Do not spray the device directly with cleaning or disinfecting agents.

CAUTION!
Prevent liquid ingress

Liquid ingress may permanently damage the audio components.

- Do not use a wet cloth.
- Use only the minimum amount of cleaning agent required for proper cleaning.
- Prevent cleaning agents from entering the microphone and speaker openings.
- Avoid direct spraying of the device.

CAUTION!
Prevent functional impairment of the sensor

Residues may attract dust and restrict the sensor’s field of view.

- Prevent cleaning agent residues from remaining on the surface.
- Prevent dust or particles from accumulating on the lens cover.

Cleaning Procedure

1. Lightly moisten a soft microfiber cloth with a suitable cleaning or disinfecting agent.
2. Gently wipe all external surfaces without applying excessive pressure.
3. Ensure that no liquid enters any device openings (microphone, speaker).
4. Wipe the device thoroughly with a dry microfiber cloth after cleaning to remove all residues.

Post-Cleaning Requirements

Proper drying minimizes chemical stress on audio components and prevents dust accumulation that may impair sensor performance (e.g., restricted field of view due to contamination of the lens cover).

- Ensure that no visible residue remains on the surface.
- Ensure that all surfaces are completely dry.

Approved Cleaning Agents and Disinfectants

The following list contains a range of approved cleaning and disinfecting agents that are suitable for ensuring the longevity and performance of your devices.

These products have been specifically selected for their compatibility with the device's surface materials and promise minimal impact with an exposure time of at least 60 hours.

Agent	Compatibility
Isopropanol (Isopropyl alcohol; IPA) 70%	Compatible at 1.0% concentration
Ethanol (Ethyl Alcohol)	Compatible at 0.5% concentration
Saline Solution 10%	Compatible at 1.0% concentration

Incompatible Cleaning Agents

Do not use the following substances as they can damage the surfaces or impair the effectiveness of the disinfection:

- Methyl Ethyl Ketone (MEK)
- Organic compounds containing lipid hydrocarbons, including fatty acid derivatives

- DEHP (Di(2-ethylhexyl) phthalate)
- Bleach (Sodium hypochlorite solution)
- Cidex glutaraldehyde-based disinfectants
- Virex organic ammonium chloride-based disinfectants
- Betadine microbicide; povidone-iodine solution
- Hydrogen peroxide

MOBOTIX
BeyondHumanVision

EN_10/26
MOBOTIX AG • Am Stundenstein 2 • D-67722 Winnweiler • Tel.: +49 6302 9816-103 • sales@mobotix.com • www.mobotix.com
MOBOTIX is a trademark of MOBOTIX AG registered in the European Union, the U.S.A., and in other countries. Subject to change without notice. MOBOTIX do not assume any liability for technical or editorial errors or omissions contained herein. All rights reserved. © MOBOTIX AG 2023